SJ
Shanglie PM

——从顾客利益出发，提供高性价比的机床装备。

Engineered for You-Superior Quality, Unbeatable Value.



数控车削中心
CNC Turning Center





数控立式车削中心
CNC Vertical Turning Center



湖北上捷精密机械制造有限公司

上精捷机





湖北上捷精密机械制造有限公司始于 2007 年，目前拥有 2 万平米的高标准厂房。公司产品包括：数控车削中心、立/卧式加工中心、数控龙门加工中心、精密磨床等，我们致力于成为多品种，智能化，精密化，系列化的综合型设备供应商。

公司通过 ISO9001 质量体系认证。我们拥有机床制造的全产业链加工能力，公司设立产品设计部，品控部，铸件加工部，钣金加工部，涂装部，零部件机加部，设备组装、调试部。所有机床从设计到调试出厂全部自主完成，做到产品质量可控。我们拥有多台精密龙门加工中心、立/卧式加工中心、数控车床、激光切割机、数控折弯机等加工设备。

公司拥有激光干涉仪，高精度双轴光电自准直仪，激光角摆仪等众多高精密测量仪器，同时，我们的机床铸件全部选用 HT300 高标号材料。经过回火处理后预留一定时间的自然时效，达到充分释放铸件内应力的目的。再加上严格的品控流程，保证机床品质稳定。

严谨，务实，诚信，担当作为我们恪守的企业发展理念，一定会给你带来满意的设备，达到合作共赢的目的。















数控平床身排刀车床
CNC Gang Tool Flat Bed Lathe 4, 5

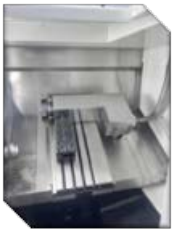

高精度数控斜床身排刀车床
High-Precision CNC Slant Bed Linear Turret Lathe 6, 7



高精度数控斜床身双主轴排刀车床
High-precision CNC Slant Bed Double-spindle Linear Turret Lathe 8, 9



高精度数控斜床身刀塔车床
High-Precision CNC Slant Bed Tool Turret Lathe 10, 11



高精度数控车削中心
High-Precision CNC Turning Center 12, 13



高精度大型数控车削中心
High-Precision Large-Scale CNC Turning Center 14, 15



带 Y 轴车削中心
Turning Center With Y-axis 16, 17



数控立式车削中心
CNC Vertical Turning Center 18, 19

机床特性 Machine Features

铸件材质 Casting Material

床身采用 HT300 铸件，整体床身，经过震动时效和二次回火工艺，消除应力，提供优异的尺寸稳定性和耐久性。保证用户在长时间使用中保持机床精度稳定。

Machine bed is constructed with HT300 grade cast iron as a monolithic casting, processed through vibration aging and double tempering treatments to eliminate residual stresses. This ensures exceptional dimensional stability and long-term durability, guaranteeing consistent machining accuracy during extended operation.

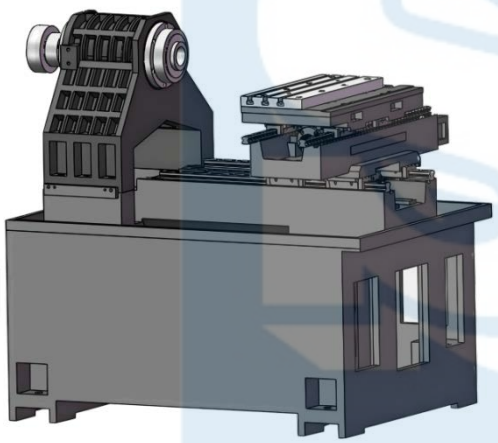

床身结构 Bed Structure

机床结构采用整体床身，低重心设计，运用有限元素分析（ FEM ），优化铸件加强筋形状、位置，使床身强度达到最优。以便让床身结构更利于重切削。提高刀具使用寿命。

The machine tool's structural design features a monoblock bed with a low center of gravity. Finite Element Analysis (FEM) is employed to optimize the geometry and layout of reinforcing ribs in the cast components, maximizing bed rigidity. This configuration ensures superior performance in heavy-duty cutting operations while extending tool service life.

技术参数 Specifications

	PT32	PT36	PT46	PT52
最大回转直径 Max. swing diameter	410mm	410mm	410mm	410mm
拖板上最大加工直径 Max. machining diameter on the saddle	140mm	140mm	140mm	140mm
最大棒料直径 Max. bar through diameter	28mm	36mm	46mm	52mm
主轴端部形式 Spindle nose	A2-4	A2-5	A2-6	A2-6
主轴电机功率 Spindle motor power	4KW	5.5KW	5.5KW	7.5KW
主轴孔直径 Spindle bore	38mm	48mm	56mm	66mm
主轴最高转速 Max. spindle speed	4000r/min	4000r/min	4000r/min	4000r/min
X 轴行程 X axis	360mm	440mm	440mm	440mm
Z 轴行程 Z axis	330mm	440mm	440mm	440mm
X 轴快速进给速度 X axis rapid feed speed	25m/min	25m/min	25m/min	25m/min
Z 轴快速进给速度 Z axis rapid feed speed	25m/min	25m/min	25m/min	25m/min
X 轴电机最大转矩 X axis Max. torque of motor	18N.m	18N.m	18N.m	18N.m
Z 轴电机最大转矩 Z axis Max. torque of motor	18N.m	18N.m	18N.m	18N.m
气动夹紧 Pneumatic clamping	后拉式弹簧筒夹 Spring collet			
手动卡盘 Manual chuck	5”	6”	6”	6”
液压夹紧 Hydraulic clamping	后拉式弹簧筒夹 Spring collet			
4 工位电动刀架 4-station electric knife holder 刀方规格 OD tool size	16x16mm			
机床外型尺寸 (长 x 宽 x 高) Machine size (L x W x H)	153x132x158 cm		168x140x160 cm	
标准机床重量 Standard weight	1700KG	1700KG	2000KG	2000KG

功能拓展 Functional Expansion

●模块化动力头 Modular Power Head

可根据客户零件加工工艺要求，增加相应的动力头组合，以实现对零件钻、铣、攻丝等特征加工需求。

Customized power head configurations can be added according to the customer's part processing requirements, enabling drilling, milling, tapping, and other feature machining operations.













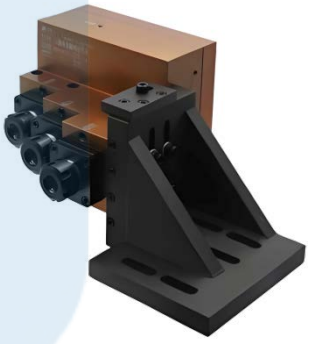

●车铣复合 Turn-Mill

可根据需求选用特制床身，增加 X 轴拖板强度，以便搭载伺服刀塔和 Y 轴动力头，实现高端机有的车铣复合功能，解决复杂零件的加工需求，为客户降低设备投入成本。

The machine can be equipped with a specially reinforced bed to enhance X-axis carriage rigidity, enabling integration of servo turret and Y-axis power heads. This configuration delivers advanced turning-milling compound functionality, addressing complex part machining requirements while reducing customers' capital investment in equipment.

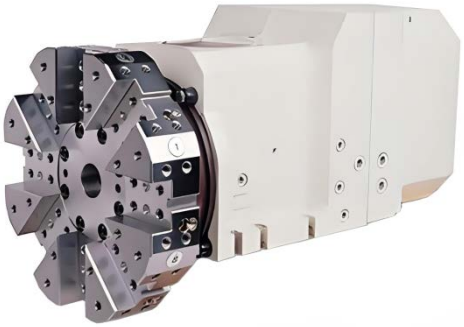



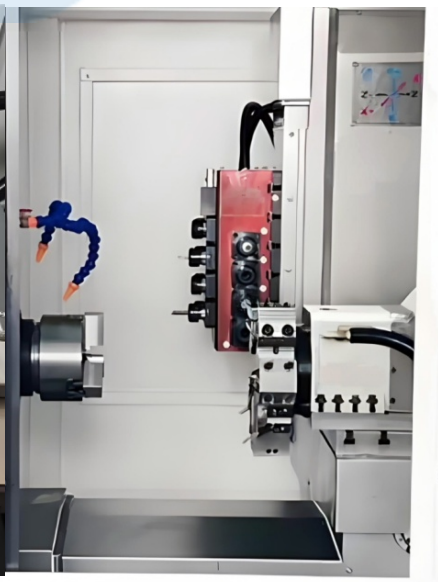

高精度数控斜床身排刀车床
High-Precision CNC Slant Bed Linear Turret Lathe

机床特性 Machine Features

铸件材质 Casting Material

床身采用 HT300 铸件，整体床身，经过震动时效和二次回火工艺，消除应力，提供优异的尺寸稳定性和耐久性。保证用户在长时间使用中保持机床精度稳定。

Machine bed is constructed with HT300 grade cast iron as a monolithic casting, processed through vibration aging and double tempering treatments to eliminate residual stresses. This ensures exceptional dimensional stability and long-term durability, guaranteeing consistent machining accuracy during extended operation.

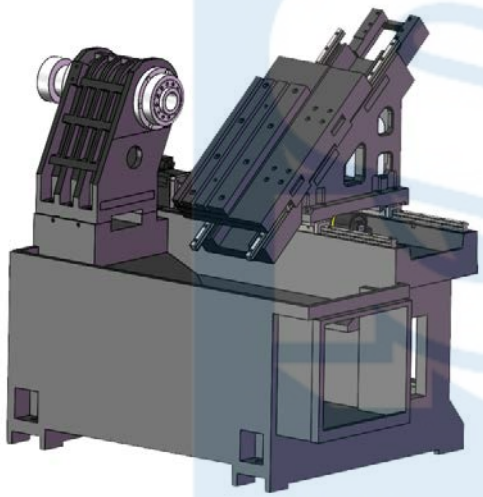

床身结构 Bed Structure

机床结构采用整体床身，低重心设计，宽体平床身配合 45° 斜床鞍更利于排屑，加工时拥有更好的刀具几何对称性，减轻刀具侧向负载。使刀具寿命更长，提高加工精度。

The machine features a rigid monolithic bed with a low-center-of-gravity design. Its wide flat bed and 45º inclined saddle optimize chip removal, while ensuring superior tool symmetry during cutting. This minimizes lateral tool deflection, prolonging tool life and improving precision

技术参数 Specifications

	ST32	ST36	ST46	ST52
最大回转直径 Max. swing diameter	470mm	470mm	500mm	500mm
拖板上最大加工直径 Max. machining diameter on the saddle	140mm	140mm	140mm	140mm
最大棒料直径 Max. bar through diameter	28mm	36mm	46mm	52mm
主轴端部形式 Spindle nose	A2-4	A2-5	A2-6	A2-6
主轴电机功率 Spindle motor power	4KW	5.5KW	5.5KW	7.5KW
主轴孔直径 Spindle bore	38mm	48mm	56mm	66mm
主轴最高转速 Max. spindle speed	4000r/min	4000r/min	4000r/min	4000r/min
X 轴行程 X axis	360mm	440mm	440mm	440mm
Z 轴行程 Z axis	330mm	440mm	440mm	440mm
X 轴快速进给速度 X axis rapid feed speed	25m/min	25m/min	25m/min	25m/min
Z 轴快速进给速度 Z axis rapid feed speed	25m/min	25m/min	25m/min	25m/min
X 轴电机最大转矩 X axis Max. torque of motor	18N.m	18N.m	18N.m	18N.m
Z 轴电机最大转矩 Z axis Max. torque of motor	18N.m	18N.m	18N.m	18N.m
气动夹紧 Pneumatic clamping	后拉式弹簧筒夹 Spring collet			
手动卡盘 Manual chuck	5”	6”	6”	6”
液压夹紧 Hydraulic clamping 卡盘尺寸 Chuck Size	后拉式弹簧筒夹 Spring collet			
4 工位电动刀架 4-station electric knife holder 刀方规格 OD tool size	16x16mm			
机床外型尺寸 (长 x 宽 x 高) Machine size (L x W x H)	150x135x160		165x142x165	
标准机床重量 Standard weight	1850KG	1850KG	2100KG	2200KG

功能拓展 Functional Expansion

模块化动力头 Modular Power Head

可根据客户零件加工工艺要求，增加相应的动力头组合，以实现对零件钻、铣、攻丝等特征加工需求。

Customized power head configurations can be added according to the customer's part processing requirements, enabling drilling, milling, tapping, and other feature machining operations.



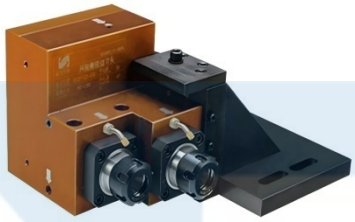
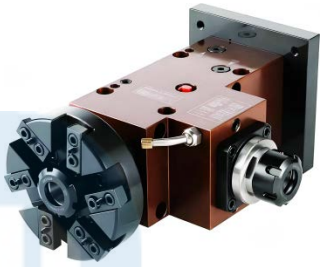

车铣复合 Turn-Mill

可根据需求搭载伺服刀塔或灵活搭配各型动力头，实现高端机有的车铣复合功能，解决复杂零件的加工需求，为客户降低设备投入成本。

The machine can be configured with a servo turret or customized with multiple power heads to deliver high-end turning-milling capabilities. This versatile solution meets complex machining demands while minimizing customers' capital expenditure on equipment.


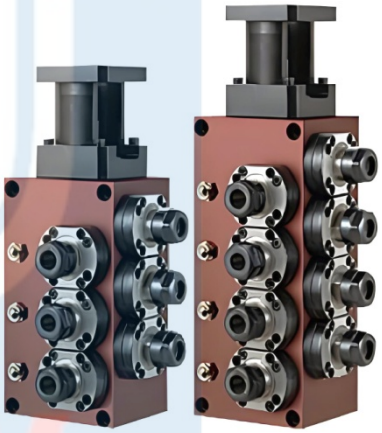

ShangJie PM


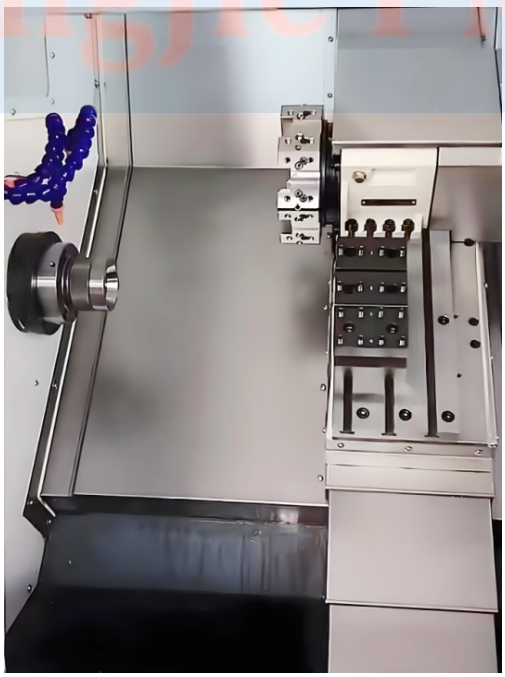


高精度数控斜床身双主轴排刀车床
High-precision CNC Slant Bed Double-spindle Linear Turret Lathe

机床特性 Machine Features

床身结构 Bed Structure

机床结构采用整体床身，低重心设计，宽体、厚壁床身底座能够大幅降低机床在高速、重切削时产生的震动，提高精密零部件的加工精度。

运用有限元素分析（ FEM ），优化铸件加强筋形状、位置，使床身强度达到最优。以便让床身结构更利于重切削。提高刀具使用寿命。

The machine tool structure adopts an integral bed with a low center of gravity design. The wide and thick-walled bed base can significantly reduce the vibration generated by the machine tool during high-speed and heavy cutting, improving the machining accuracy of precision parts.

By using finite element analysis (FEM), the shape and position of the reinforcing ribs of the casting are optimized to achieve the optimal strength of the bed. This makes the bed structure more suitable for heavy cutting and increases the service life of the cutting tools.

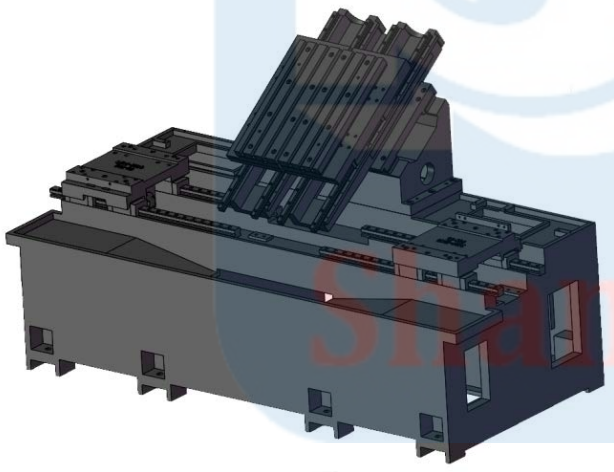

技术参数 Specifications

	ET04D/05D	ET04W/05W	ET04P/05P
最大回转直径 Max. swing diameter	530mm	530mm	500mm
拖板上最大加工直径	140mm Max. machining diameter on the saddle		
最大棒料直径 Max. bar through diameter	28mm 38mm	28mm 38mm	38mm 38mm
主轴端部形式 Spindle nose	A2-4 A2-5	A2-4 A2-5	A2-5 A2-5
主轴电机功率 Spindle motor power	永磁同步电主轴 4 / 5.5-12KW Permanent Magnet Synchronous Motor Spindle		
主轴孔直径 Spindle bore	38mm 48mm	38mm 48mm	48mm 48mm
主轴最高转速 Max. spindle speed	6000r/min	6000r/min	6000r/min
X1 轴行程 X1 axis	500mm	500mm	320mm
X2 轴行程 X2 axis	500mm	375mm	320mm
Z1 轴行程 Z1 axis	430mm	370mm	340mm
Z2 轴行程 Z2 axis	400mm	900mm	320mm
X 轴快速进给速度 X axis rapid feed speed	25m/min	25m/min	25m/min
Z 轴快速进给速度 Z axis rapid feed speed	25m/min	25m/min	25m/min
X 轴电机最大转矩 X axis Max. torque of motor	18N.m	18N.m	18N.m
Z 轴电机最大转矩 Z axis Max. torque of motor	18N.m	18N.m	18N.m
气动夹紧 Pneumatic clamping	后拉式弹簧筒夹 Spring collet		
液压夹紧 Hydraulic clamping 卡盘尺寸 Chuck Size	5”	5”	5”
机床外型尺寸 (长 x 宽 x 高) cm Machine size (L x W x H)	240x135x160		200x135x165
标准机床重量 Standard weight	3550KG	3500KG	3500KG

机床特点 Machine Characteristics

正副主轴均采用永磁同步电主轴，功率大，动力强，无皮带传动，提高机床在高速车削的尺寸稳定性和工件表面光洁度。主轴导轨采用大规格高精度滚柱线轨，既能保证机床的加工刚性，又能提高机床的加工精度。

配合相应的动力头，实现车铣复合功能，对于客户复杂零件能够一次装夹，完成全部加工工序。

Both the main and auxiliary spindles adopt permanent magnet synchronous electric spindles, which have high power and strong force, without belt transmission. This enhances the dimensional stability and surface finish of the workpiece during high-speed turning. The spindle guide rails use large-sized and high-precision roller linear guides, which not only ensure the machining rigidity of the machine tool but also improve its machining accuracy.

Combined with the corresponding power head, it realizes the turning and milling compound function, enabling complex parts of customers to be processed in one clamping, completing all machining procedures.

高精度数控斜床身双主轴排刀车床
High-precision CNC Slant Bed Double-spindle Linear Turret Lathe

ET04D

ET04D 机型采用主、副主轴移动，X 轴中拖板固定式，此款机床设计能够提供超大 X 轴行程，同时中拖板能够对上拖板在全行程上提供承载，可以有效的保证 X 轴拖板在任意位置不会出现翘头的现象， 更有利于搭载动力头。进行车、铣、钻孔等复杂加工。

Both the main and auxiliary spindles adopt permanent magnet synchronous electric spindles, which have high power and strong force, without belt drive. This enhances the dimensional stability of the machine tool during high-speed turning and further improves the surface finish of the workpiece. The spindle guide rails use large-sized and high-precision roller linear guides, which not only ensure the machining rigidity of the machine tool but also improve its machining accuracy.

Combined with the corresponding power head, it can achieve turning and milling compound functions, enabling the completion of all processing procedures for complex parts of customers in a single clamping.



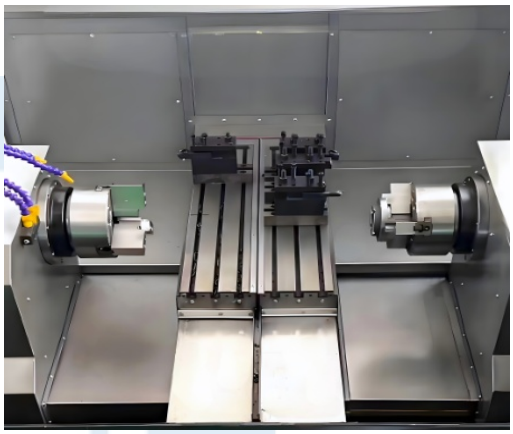

ET04W

ET04W 机型采用正主轴固定，副主轴移动结构。

ET04W model adopts a structure where the main spindle is fixed and the auxiliary spindle moves.

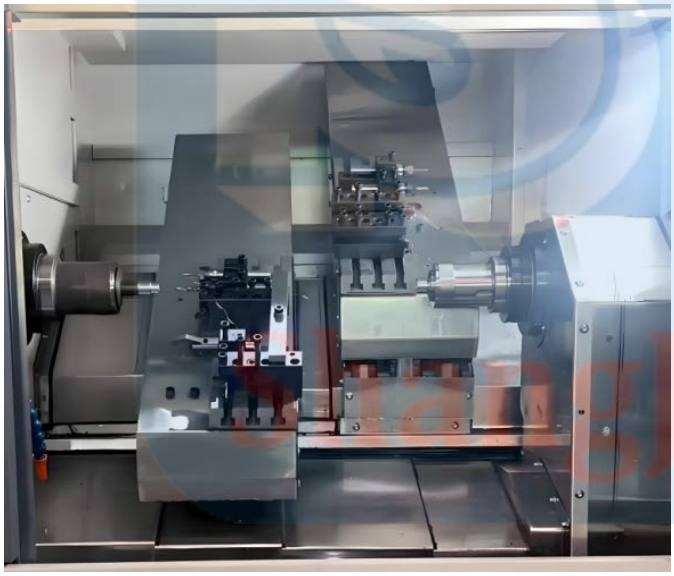

ET04P

ET04P 机型采用正主轴固定，X1 轴拖板垂直，消除反向间隙。

ET04P model adopts a fixed main spindle in the positive direction, with the X1 axis carriage vertical to eliminate reverse clearance.



自动上料，无人看管模式 Automatic feeding, unattended mode

ET04W、ET04P 机型能够加装自动给料机。自动给料，自动完成零件正反面全部加工工序，实现无人看守，提高加工效率和用工成本。

ET04W and ET04P models can be equipped with an automatic feeder. With automatic feeding, all processing procedures on both sides of the parts can be completed automatically, achieving unattended operation and enhancing processing efficiency while reducing labor costs.





机床特性 Machine Features



床身结构 Bed Structure

XT 系列是专门为盘类、短轴类重切削设计的机床，采用整体床身，加宽、加重、低重心设计，降低机床在重切削时产生的震动，X 向斜床鞍 45°布局有效抵抗水平和垂直方向的受力，同时消除丝杆反向间隙，加工时拥有更好的刀具几何对称性，减轻刀具侧向负载。使刀具寿命更长，提高加工精度。

运用有限元素分析（FEM），优化铸件加强筋形状、位置，使床身强度达到最优。以便让床身结构更利于重切削。提高刀具使用寿命。

The XT series is a type of machine tool specially designed for heavy cutting of disc-shaped and short shaft parts. It features an integral bed with a widened, reinforced and low center of gravity design to reduce vibrations during heavy cutting. The 45° inclined saddle layout in the X direction effectively resists forces in both horizontal and vertical directions, eliminates backlash in the lead screw, and ensures better geometric symmetry of the cutting tool during processing, reducing lateral loads on the tool. This results in longer tool life and improved processing accuracy.

By applying finite element analysis (FEM), the shape and position of the reinforcing ribs in the castings are optimized to achieve the best bed strength, making the bed structure more suitable for heavy cutting and extending the tool's service life.

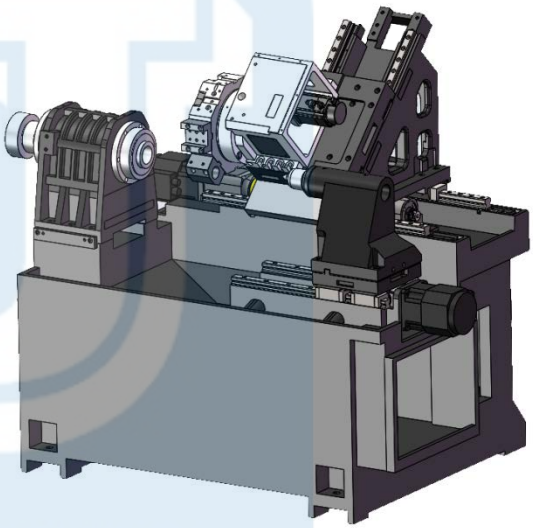

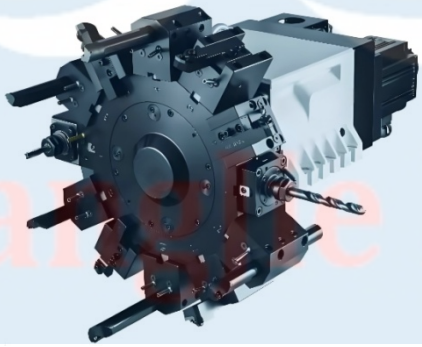

车铣复合 Turn-Mill

XT 全系列可搭载伺服动力刀塔实现车铣复合功能加工能力

The entire XT series can be equipped with a servo power tool turret to achieve the processing capability of turning and milling compound functions.

可编程尾座 Programmable Tailstock

XT 系列尾座机型可以根据客户产品需求配备伺服或者液压可编程尾座。

XT series tailstock models can be equipped with servo or hydraulic programmable tailstocks According to the product requirements of customers.



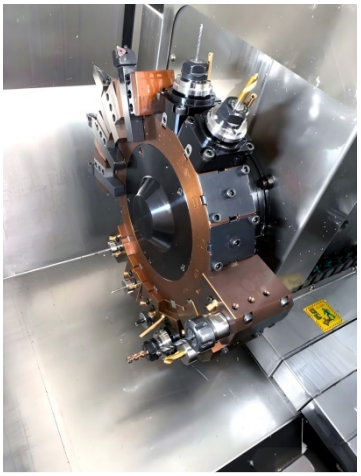



高精度数控斜床身刀塔车床
High-Precision CNC Slant Bed Tool Turret Lathe

●机型说明 Model Description

XT 系列----伺服刀塔，无尾座（可选配伺服动力刀塔，实现车铣复合功能。）
XT/W 系列----伺服刀塔，带尾座（可选配伺服动力刀塔）
XT/DS 系列----伺服刀塔，双主轴（可选配伺服动力刀塔）
XT Series - Servo tool turret, without tailstock (Optional servo power tool turret to achieve Turn-Mill function.)
XT/W Series - Servo tool turret, with tailstock (Optional servo power tool turret)
XT/DS Series - Servo tool turret, dual spindles (Optional servo power tool turret)

■ 技术参数 Specifications

	XT04	XT04W	XT04DS	XT05	XT05W	XT05DS	XT06	XT06W	XT06DS	XT08	XT08W
最大回转直径 Max. swing diameter	500mm			600mm			600mm			700mm	
最大加工直径 Max. machining diameter	320mm			460mm			460mm			520mm	
最大加工长度 Max. machining length	----	300mm		----	350mm		----	350mm		----	350
主轴端部形式 Spindle nose	A2-4			A2-5			A2-6			A2-8	
主轴电机功率 Spindle motor power	4.0/5.5 KW			5.5/7.5 KW			7.5/11 KW			11/15 KW	
主轴孔直径 Spindle bore	38mm			48mm			72mm			87mm	
主轴最高转速 r/min Max. spindle speed	4000		6000	4000		6000	4000		6000	3000	
副主轴规格 Specification of the sub-spindle	----		A2-4	----		A2-4	----		A2-4	----	
X 轴行程 X axis	200mm			280mm			280mm			300mm	
Z 轴行程 mm Z axis	380			450			450			450	
X 轴快速进给速度 X axis rapid feed speed	25m/min			25m/min			30m/min			30m/min	
Z 轴快速进给速度 Z axis rapid feed speed	25m/min			25m/min			30m/min			30m/min	
X 轴电机最大转矩 X axis Max. torque of motor	25.2N.m			25.2N.m			34.5N.m			34.5N.m	
Z 轴电机最大转矩 Z axis Max. torque of motor	25.2N.m			25.2N.m			34.5N.m			34.5N.m	
液压夹紧 Hydraulic clamping 卡盘尺寸 Chuck Size	6”			8”			10”			12”	
伺服刀塔 Servo Tool Turret	8 工位			8/12 工位			8/12/16 工位			8/12 工位	
刀方规格 OD tool size	20x20mm			25x25mm			25x25mm				
尾座行程 Tailstock travel	----	MT-4# 300mm	----	----	MT-4# 300mm	----	----	MT-4# 300mm	----	----	MT-5# 300mm
机床外型尺寸(长 x 宽 x 高) cm Machine size (L x W x H)	165/185x136x160			180/200x142x165			180/200x142x165			180x158x175	
标准机床重量 Standard weight	2.5T	2.8T	3.0T	2.8T	3.1T	3.3T	3.1T	3.3T	3.5T	3.5T	3.8T

Shangjie PM

高精度数控车削中心（重型）
High-Precision CNC Turning Center (heavy-duty)

机床特性 Machine Features

床身结构 Bed Structure

HT 系列为重型刀塔车削中心，专门为大型盘类、轴类重切削设计的机床，尾座、副主轴轨道部分均采用整体铸造，并做了加固优化处理，超宽大的床身更利于提高加工稳定性，特别适合车、铣复合加工要求。45° 斜床鞍配合大规格滚柱线轨和精密级滚珠丝杆，使它能够胜任各种加工任务，并且保持床身精度长久保持不变。

运用有限元素分析（FEM），优化铸件加强筋形状、位置，使床身强度达到最优。以便让床身结构更利于重切削。提高刀具使用寿命。

The HT series is a heavy-duty turret turning center, specifically designed for heavy cutting of large discs and shafts. The tailstock and sub-spindle rail parts are all integrally cast and have undergone reinforcement and optimization treatment. The extra-wide bed is more conducive to improving processing stability and is particularly suitable for turning and milling compound processing requirements. The 45° inclined saddle, combined with large-sized roller linear guides and precision-grade ball screws, enables it to handle various processing tasks and maintain the bed accuracy for a long time.

By applying finite element analysis (FEM), the shape and position of the reinforcing ribs in the castings are optimized to achieve the best bed strength, making the bed structure more suitable for heavy cutting and extending the tool's service life.



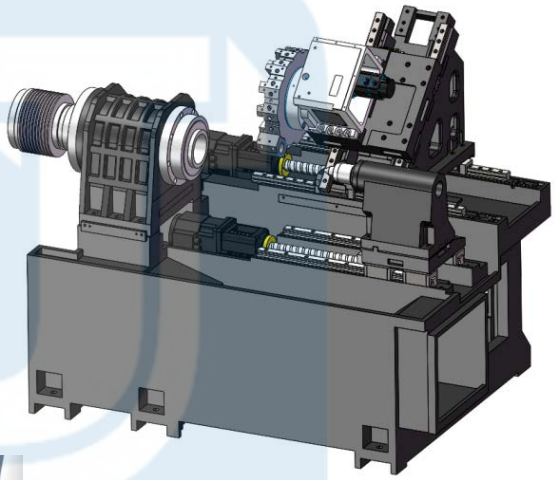

车铣复合 Turn-Mill

HT 全系列可搭载伺服动力刀塔实现车铣复合功能加工能力

The entire HT series can be equipped with a servo power tool turret to achieve the processing capability of turning and milling compound functions.

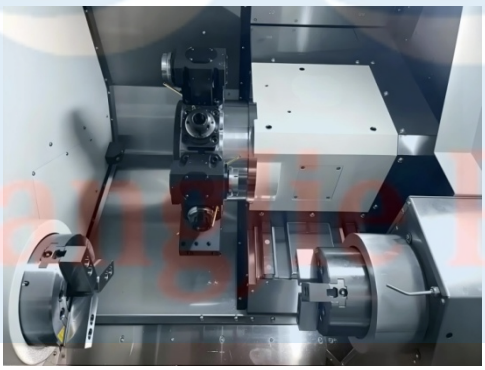

可编程尾座 Programmable Tailstock

HT 系列尾座机型可以根据客户产品需求配备伺服或者液压可编程尾座。

HT series tailstock models can be equipped with servo or hydraulic programmable tailstocks According to the product requirements of customers.

插补 Y 轴 Interpolation of the Y-axis

HT/Y、HT/DSY 系列搭配插 Y 轴实现车铣复合功能。Y 轴行程达到±60mm，基本满足所有加工需求。

HT/Y and HT/DSY series, paired with a Y-axis insert, achieve combined turning and milling functions. The Y-axis travel reaches ±60mm, basically meeting all processing requirements.

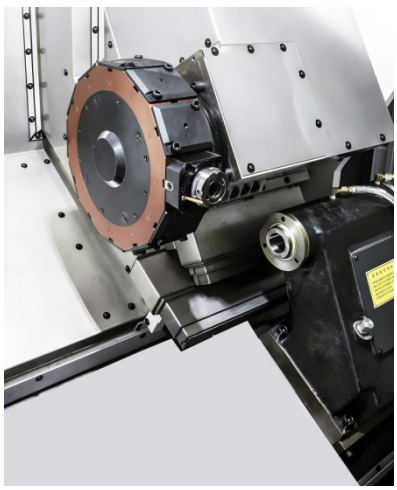



高精度数控车削中心（重型）
High-Precision CNC Turning Center (heavy-duty)

机型说明 Model Description

HT 系列----伺服刀塔，带尾座（可选配伺服动力刀塔）
HT/Y 系列----伺服动力刀塔，带尾座，插补 Y 轴
HT/DS 系列----伺服动力刀塔，双主轴
HT/DSY 系列----伺服动力刀塔，双主轴，插补 Y 轴
HT Series ---- Servo tool turret, with tailstock (Optional servo power tool turret)
HT/Y Series ---- Servo power tool turret, with tailstock, interpolating Y-axis
HT/DS Series ---- Servo Power tool turret, dual spindles
HT/DSY Series ---- Servo Power tool turret, dual spindles, interpolating Y-axis

技术参数 Specifications

	HT06	HT06DS	HT06Y	HT06DSY	HT08	HT08DS	HT08Y	HT08DSY
最大回转直径 Max. swing diameter	660mm				660mm			
最大加工直径 Max. machining diameter	520mm		420mm		520mm		420mm	
最大加工长度 Max. machining length	350 / 550 / 750 mm				350 / 550 / 750 mm			
主轴端部形式 Spindle nose	A2-6				A2-8			
主轴电机功率 Spindle motor power	7.5/11 KW				11/15 KW			
主轴孔直径 Spindle bore	72mm				87mm			
主轴最高转速 Max. spindle speed	3000r/min	4000r/min			3000r/min	4000r/min		
副主轴规格 Specification of the sub-spindle	----	A2-5	----	A2-5	----	A2-5	----	A2-5
插补 Y 轴行程 Interpolation of Y-axis travel	----		±55mm		----		±65mm	
X 轴行程 X axis	305mm				305mm			
Z 轴行程 Z axis	450/650/850mm				450/650/850mm			
X 轴快速进给速度 X axis rapid feed speed	30m/min				30m/min			
Z 轴快速进给速度 Z axis rapid feed speed	30m/min				30m/min			
X 轴电机最大转矩 X axis Max. torque of motor	34.5N.m				34.5N.m			
Z 轴电机最大转矩 Z axis Max. torque of motor	34.5N.m				45N.m			
Y 轴电机最大转矩 Y axis Max. torque of motor	34.5N.m				34.5N.m			
液压夹紧 Hydraulic clamping 卡盘尺寸 Chuck Size	10”				10/12”			
伺服刀塔 Servo Tool Turret	8/12 工位	12/16 工位			8/12 工位	12/16 工位		
刀方规格 OD tool size	25x25mm				25x25mm			
尾座行程 Tailstock travel	MT-5# 300/400/500mm	----	MT-5# 300/400/500mm	----	MT-5# 300/400/500mm	----	MT-5# 300/400/500mm	----
机床外型尺寸(长 x 宽 x 高) cm Machine size (L x W x H)	220/245/270x147x180				235/260/285x147x185			
标准机床重量 Standard weight	3.5/3.8/4.5T	4.3/4.7/4.9T	5.1/5.5/5.8T	4.6/5.1/5.9T	4.5/4.8/5.0T	4.7/5.0/5.2T	4.8/5.1/5.3T	4.9/5.2/5.5T

Shangjie PM

高精度大型数控车削中心
High-Precision Large-Scale CNC Turning Center

机床特性 Machine Features

床身结构 Bed Structure

HTL 系列为大型数控车削中心，专门大型长轴类产品设计，超宽大的整体床身，45° 斜床鞍配合大规格滚柱线轨和 ¢50 精密级滚珠丝杆。提供足够的机床刚性，使它能够胜任各种加工任务，并且长久保持床身精度。

运用有限元素分析（FEM），优化铸件加强筋形状、位置，使床身强度达到最优。以便让床身结构更利于重切削。提高刀具使用寿命。

The HTL series is a large-scale CNC turning center, specially designed for large and long shaft products. It features an ultra-wide integral bed, a 45° inclined saddle, and large-sized roller linear guides and ¢50mm precision-grade ball screw. This provides sufficient machine rigidity, enabling it to handle various machining tasks and maintain bed accuracy for a long time.

By applying finite element analysis (FEM), the shape and position of the reinforcing ribs in the castings are optimized to achieve the best bed strength, making the bed structure more suitable for heavy cutting and extending the tool's service life.



全防护钣金 Full protection sheet metal

全包围不锈钢内防护钣金，布局合理，高端大气。

The fully enclosed stainless steel inner protective sheet metal is rationally laid out and looks high-end and elegant.

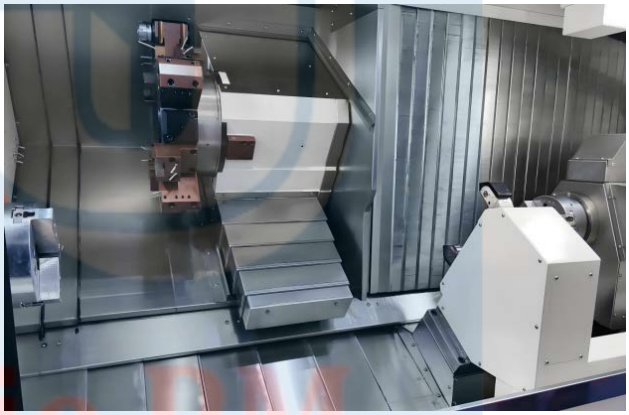

大型伺服刀塔 Large-scale Servo Tool Turret

HTL 系列配备大型伺服刀塔，进行强力切削。

HTL series is equipped with a large servo tool turret for powerful cutting.



主轴式可编程尾座 Main shaft type Programmable Tailstock

HTL 全系列配备主轴式液压可编程尾座，承载力强，定位精准，保持性好，操作方便，适合大型工件加工。

HTL series are features spindle-type hydraulic programmable tailstock with high load capacity, precise positioning, excellent stability, and convenient operation, ideal for machining large workpieces.

Y 轴车铣复合功能

Y-axis turning and milling compound function.



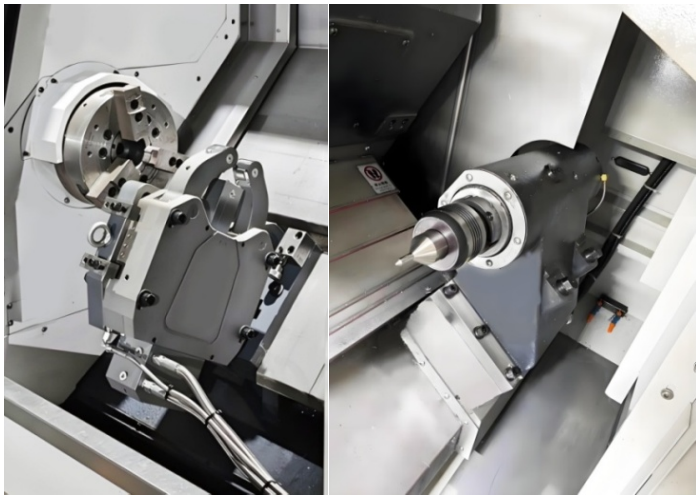

高精度大型数控车削中心
High-Precision Large-Scale CNC Turning Center

●机型说明 Model Description

HTL 系列----伺服刀塔，带尾座　　HTL/D 系列----伺服动力刀塔，带尾座　　HTL/Y 系列----伺服动力刀塔，带尾座，插补 Y 轴
HTL/ZY 系列----伺服动力刀塔，带尾座，侧挂式 Y 轴或龙门架式 Y 轴
HTL Series - Servo Tool Turret with Tailstock　　HTL/D Series – Servo Power Tool Turret with Tailstock
HTL/Y Series - Servo Power Tool Turret with Tailstock and Interpolated Y-axis
HTL/ZY Series - Servo Power Tool Turret with Tailstock and Side-mounted Y-axis or Bridge-type Y-axis

■ 技术参数 Specifications

	HTL18	HTL18D	HTL18Y	HTL18ZY	HTL110	HTL110D	HTL110Y	HTL110ZY
最大回转直径 Max. swing diameter	850mm				850mm			
最大加工直径 Max. machining diameter	620mm				660mm			
最大加工长度 Max. machining length	1050 / 1250 / 1550 / 1850 / 2050 mm				1050 / 1250 / 1550 / 1850 / 2050 mm			
主轴端部形式 Spindle nose	A2-8				A2-11			
主轴电机功率 Spindle motor power	11/15 KW				15/18.5 KW			
主轴孔直径 Spindle bore	91mm				127mm			
主轴最高转速 Max. spindle speed	3000r/min	6000r/min			3000r/min	6000r/min		
插补 Y 轴行程 Interpolation of Y-axis travel	----		±80mm	----	----		±90mm	----
ZY 轴行程 Interpolation of ZY-axis travel	----			±90mm	----			±100mm
X 轴行程 X axis	330mm				360mm			
Z 轴行程 Z axis	1190/1390/1690/1990/2190 mm				1230/1430/1730/2030/2230 mm			
X 轴快速进给速度 X axis rapid feed speed	30m/min				30m/min			
Z 轴快速进给速度 Z axis rapid feed speed	30m/min				30m/min			
X 轴电机最大转矩 X axis Max. torque of motor	45N.m				45N.m			
Z 轴电机最大转矩 Z axis Max. torque of motor	55.8N.m				69N.m			
Y 轴电机最大转矩 Y axis Max. torque of motor	45N.m				45N.m			
液压夹紧 Hydraulic clamping 卡盘尺寸 Chuck Size	10/12”				10/12”			
伺服刀塔 Servo Tool Turret	8/12 工位	12/16 工位			8/12 工位	12/16 工位		
刀方规格 OD tool size 镗孔刀直径 Boring tool diameter	25x25mm ¢ 50 mm				25x25mm ¢ 50 mm			
尾座行程 Tailstock travel	MT-6# 600/700/800/800/800 mm				MT-6# 600/700/800/800/800 mm			
机床外型尺寸(长 x 宽 x 高) cm Machine size (L x W x H)	320/345/375/415/435x147x185				335/360/385/415/450x147x185			
标准机床重量 Standard weight	7.9/8.2/8.5/8.8/9.1T		8.5/8.8/9.1/9.4/9.7T		8.1/8.4/8.7/9.0/9.3T		8.5/8.9/9.5/10.0/10.5T	

Shangjie PM

●可编程伺服或者液压尾座 Programmable servo or hydraulic tailstock

XT/W、HT 系列尾座机型可根据客户产品的具体需求，选配伺服或液压的可编程尾座。支持任意位置启停，顶紧压力可调，能够满足精细化加工的要求。

XT/W, HT series tailstock models can be optionally equipped with programmable tailstocks that are either servo-driven or hydraulic based on the specific demands of the customer's products. They support starting and stopping at any position, and the clamping pressure is adjustable, which is capable of meeting the requirements of refined processing.

●全包围不锈钢内防护布局 Fully enclosed stainless steel inner protective layout

全系列采用全包围式不锈钢内防护钣金设计，布局科学合理，做工精湛，密封性能优异，有效确保设备在运行过程中具备防水、防油的特性。
The entire series employs a fully-enclosed stainless steel inner protective sheet metal design. Its scientific layout, precision engineering, and superior sealing ensure reliable waterproof and oil-resistant performance during operation.



●电机直联龙门式 Y 轴刀塔 Fully enclosed stainless steel inner protective layout

ZY 系列机型原则上仅采用电机直联龙门式 Y 轴刀塔设计，从而有效确保 Y 轴的重复定位精度、铣削过程中的 Y 轴刚性以及机床精度的长期稳定性。
ZY series models use a motor-directly-driven gantry Y-axis tool turret, ensuring Y-axis positioning accuracy, milling rigidity, and long-term machine accuracy.



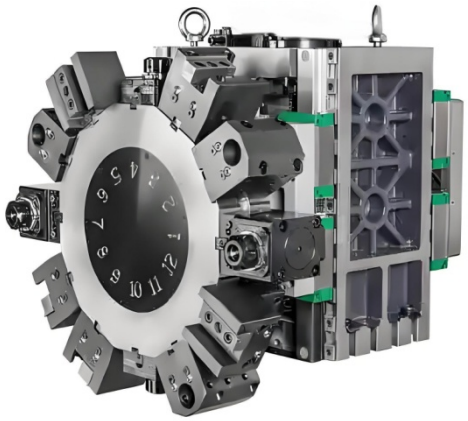

带 Y 轴车削中心
Turning Center With Y-axis

机型说明 Model Description

XT/ZY 系列----带 Y 轴刀塔，无尾座
HT/ZY 系列----带 Y 轴刀塔，带尾座

XT/ZY Series ---- Y-axis tool turret, without tailstock
HT/ZY Series ---- Y-axis tool turret, with tailstock

XT/WZY 系列----带 Y 轴刀塔，带尾座
HT/DSZY 系列----带 Y 轴刀塔，双主轴

XT/WZY Series ---- Y-axis tool turret, with tailstock
HT/DSZY Series ---- Y-axis tool turret, dual spindles

技术参数 Specifications

	XT05ZY	XT05WZY	XT06ZY	HT06ZY	HT08ZY	HT05DSZY	HT06DSZY	HT08DSZY
最大回转直径 Max. swing diameter	500mm		600mm			600mm		
最大加工直径 Max. machining diameter	260mm		300mm	360mm		320mm	360mm	
最大加工长度 Max. machining length	----	300/500mm	----	300/500/700mm		300/500/700mm		
主轴端部形式 Spindle nose	A2-5		A2-6		A2-8	A2-5	A2-6	A2-8
主轴电机功率 Spindle motor power	5.5/7.5 KW		7.5/11 KW		11/15 KW	5.5/7.5 KW	7.5/11 KW	11/15 KW
主轴孔直径 Spindle bore	48mm		72mm		87mm	48mm	72mm	87mm
主轴最高转速 Max. spindle speed	6000r/min		6000r/min			6000r/min	6000r/min	
副主轴规格 Specification of the sub-spindle	----					A2-4		
Y 轴行程 Y-axis travel	±55mm		±65mm			±55mm	±65mm	
X 轴行程 X axis	230mm		260mm			260mm		
Z 轴行程 Z axis	380mm	380/580mm	380mm	450/650/850mm		380/580mm	450/650/850mm	
X 轴快速进给速度 X axis rapid feed speed	25m/min		25m/min			25m/min	25m/min	
Z 轴快速进给速度 Z axis rapid feed speed	25m/min		25m/min			25m/min	25m/min	
X 轴电机最大转矩 X axis Max. torque of motor	25.2N.m		34.5N.m			25.2N.m	34.5N.m	
Z 轴电机最大转矩 Z axis Max. torque of motor	25.2N.m		34.5N.m			25.2N.m	34.5N.m	
Y 轴电机最大转矩 Y axis Max. torque of motor	34.5N.m		34.5N.m			34.5N.m	34.5N.m	
液压夹紧 Hydraulic clamping 卡盘尺寸 Chuck Size	6”		8”		10”	6”	8”	10”
伺服刀塔 Servo Tool Turret	12 工位					12 工位		
刀方规格 OD tool size	20x20mm		25x25mm			20x20mm	25x25mm	
尾座行程 Tailstock travel	----	MT-4# 200/300mm	----	MT-5# 250/350/400mm		----		
机床外型尺寸(长 x 宽 x 高) cm Machine size (L x W x H)	185/210x147x175		220/245/270x147x180			235/260/285x147x185		
标准机床重量 Standard weight	3.8T	4.2/4.8T	4.2T	4.6/5.5/6.5T		4.1T	4.8/5.7/6.7T	

Shangjie Plm



●机床结构 Machine Structure

VT 系列机床以低重心，防扭曲，重切削，高材料去除效率为主旨专业设计制造。采用箱式底座，加宽加厚 Z 轴立柱，整机刚性好。

运用有限元素分析（ FEM ），优化铸件加强筋形状、位置，使床身强度达到最优。并且对主轴底座和 Z 轴横梁做了特别加强结构，以便让床身更加稳固，不会出现变形。

VT series machine tools are professionally designed and manufactured with the main focus on low center of gravity, anti-twist, heavy cutting, and high material removal efficiency. They adopt a box-type base and widened and thickened Z-axis columns, ensuring excellent rigidity of the entire machine.

By applying finite element analysis (FEM), the shape and position of the reinforcing ribs on the castings are optimized to achieve the best strength of the bed. Additionally, special reinforcement structures are implemented for the spindle base and the Z-axis crossbeam to make the bed more stable and prevent deformation.

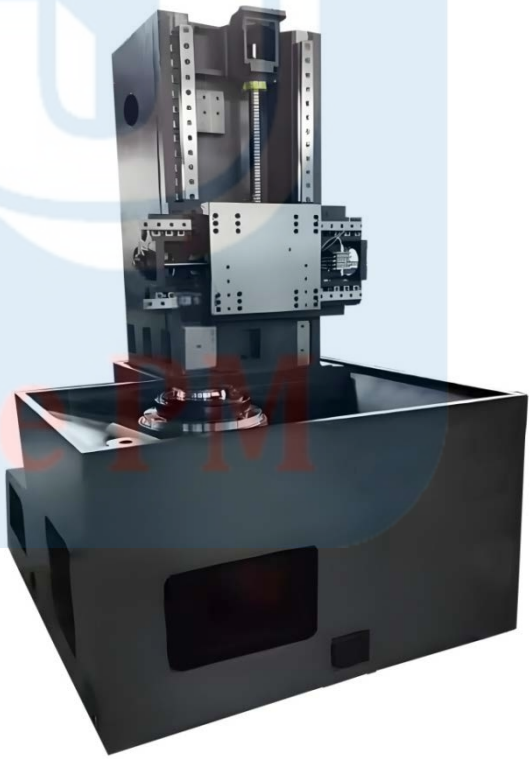

●所有安装面进行人工铲刮

安装面铲刮能确保每个部件全贴合装配，使机床长久保持初始精度。并提高机床刚性，增强加工时的抗震性能和稳定性。

The installation surface adopts manual scraping process, which enables the machine tool to maintain its initial accuracy for a long time. It also enhances the rigidity of the machine tool, as well as its anti-vibration performance and stability during processing.



●铸件材质 Casting Material

机床铸件采用 HT300 高标号材料，经过震动时效和二次回火工艺，消除内应力，强度高，抗形变能力强，具有优异吸震能力，保证用户在长时间使用中保持机床精度稳定。

Machine castings are made of HT300 high-grade material and undergo vibration stress relief and secondary tempering processes to eliminate internal stress. They feature high strength, strong resistance to deformation, and excellent shock absorption capacity, ensuring that the machine tool maintains stable precision over long-term use.



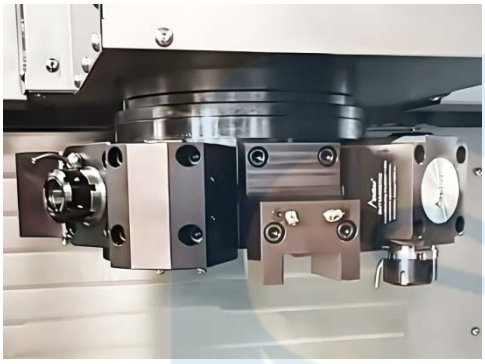

●车铣复合 Turn-Mill

可根据需求搭载伺服动力刀塔，配置各型动力头，实现车铣复合功能，解决复杂零件的加工需求，提高加工效率。

The machine can be equipped with a servo power tool turret as required, and various types of power heads can be configured to achieve turning and milling compound functions, solve the processing requirements of complex parts, and improve processing efficiency.

●应用优势 Application advantages

立式车床为整体箱型结构，矩形截面立柱，纵、横向运动采用十字滑枕结构形式，刚性好，耐重切削，精度保持性强。主轴轴径大，轴承结构刚性好 ，可进行高精度强力切削。

The vertical lathe is of an integral box-type structure with a rectangular cross-section column. The longitudinal and transverse movements adopt a cross-slide structure, which is rigid, capable of heavy cutting, and has strong precision retention. The main shaft has a large diameter and the bearing structure is rigid, allowing for high-precision and high-strength cutting.

■ 技术参数 Specifications

	VT600	VT800	VT1000
最大回转直径 Max. swing diameter	650mm	920mm	1100mm
最大车削直径 Max. turning diameter	600mm	820mm	1020mm
最大车削高度 Max. turning height	520mm	720mm	820mm
主轴端部形式 Spindle nose	A2-8	A2-11	A2-15
主轴电机功率 Spindle motor power	15/18.5 KW	18.5/22 KW	22/26 KW
主轴最高转速 Max. spindle speed	2500r/min	2000r/min	1500r/min
卡盘尺寸 Chuck Size	12”/15”(选配)	15”/18”(选配)	15”~32”
X 轴行程 mm X axis	-30,+320	-50, +450	-50, +550
Z 轴行程 Z axis	550mm	740mm	850mm
X 轴快速进给速度 X axis rapid feed speed	24m/min	20m/min	20m/min
Z 轴快速进给速度 Z axis rapid feed speed	24m/min	20m/min	20m/min
X 轴电机最大转矩 X axis Max. torque of motor	69N.m	69N.m	85.2N.m
Z 轴电机最大转矩 Z axis Max. torque of motor	85.2N.m	85.2N.m	105N.m
伺服刀塔 Servo Tool Turret	8 工位	8 工位	12 工位
刀方规格 OD tool size 镗孔刀直径 Boring tool diameter	25x25mm ¢ 40 mm	32x32mm ¢ 50 mm	32x32mm ¢ 60 mm
动力刀具规格 Power turret tool size	ER32	ER32	ER40
气源压力 Air source pressure	0.5-0.8MPa		
机床外型尺寸 (长 x 宽 x 高) cm Machine size (L x W x H)	155x220x250	200x340x365	260x350x450
标准机床重量 Standard weight	6.8 T	9.6 T	14.5 T







量身定制的自动化解决方案 Tailor-made automation solutions

根据客户需求，提供量身定制的自动化解决方案，通过实现自动上下料功能，构建无人值守的生产模式，从而显著提升生产效率与效益。

According to customer demands, we provide tailor-made automation solutions. By realizing the automatic loading and unloading function, we build an unmanned production mode, thereby significantly enhancing production efficiency and benefits.

●单机自动化 Single-machine automation



●桁架机械手气缸
Truss manipulator cylinder





●桁架机械手示教器
Truss manipulator teaching device



●车床桁架自动化单元
Automated unit for lathe truss





ShangJie PM

量身定制的自动化解决方案 Tailor-made automation solutions

整体工作站式自动化 Overall workstation-style automation





多机自动化生产线 Multi-machine Automated Production Line





●伺服刀塔 Servo Tool Turret / 伺服动力刀塔 Servo Power Tool Turret


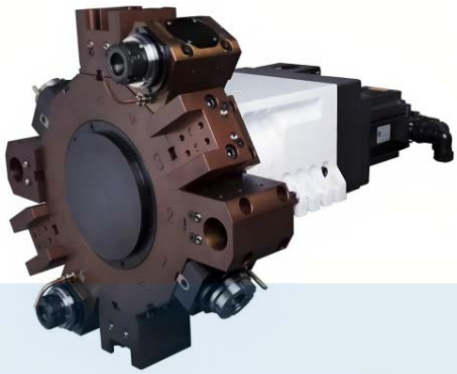
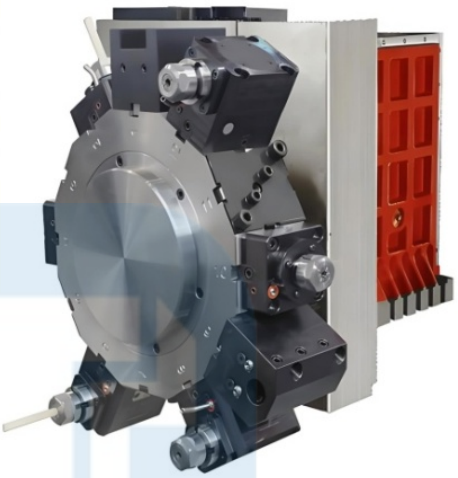

●伺服刀塔刀座 Servo Turret Tool Post



●伺服刀塔动力刀座 Servo Turret Power Tool Post

●**90°动力刀座**
90°power tool holder



●**万向动力刀座**
Universal power tool holder



●**插齿动力刀座**
Gear Shaping power tool holder



●**0°动力刀座**
0°power tool holder



●**滚齿动力刀座**
Gear hobbing power tool holder



ShangJie PM

●可加装车床对刀仪，结合软件编程，使产品开发效率翻倍

The installation of an add-on tool presetter on lathes, when integrated with software programming, can double product development efficiency.

●可选配高压出水，利于断屑，提高工件表面光洁度

Optional high-pressure water output is available, which is conducive to chip breaking and improving the surface finish of the workpiece.

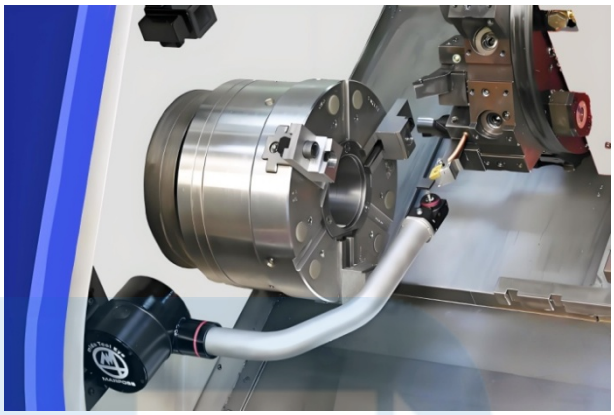



●可根据客户要求配置各型数控系统，如：法那科，新代，凯恩帝，广数等品牌。

CNC control systems can be configured according to customer requirements. Like: FANUC, SYNTEC, KND, GSK and so on.



K2000TF4*i*





K2000TF3*i*







特别提醒

1. 本目录中的内容，可能有因改良而无法预见告知的变更情况，我公司保留变更权，恕不另行通知，请谅解。
2. 由于印刷关系，实体产品的颜色与所于的图片有部分差异。本画册产品图片，版权所有，不得转载，违者必究。
3. The contents in this catalogue may be subject to changes due to improvements that cannot be foreseen and notified. Our company reserves the right to make changes without further notice. We apologize for any inconvenience this may cause.



湖北上捷精密机械制造有限公司

湖北省丹江口市六里坪工业园双龙路B区5号

国内销售电话：15907285811

售后服务电话：13669092850

0719-5715855

网址：http://www.shanjmc.com

E-mail: aimmy@shanjmc.com

国内业务

Hubei Shangjie Precision Machinery Manufacturing Co., Ltd.

No. 5, B Zone, Shuanglong Road, Liuliping Industrial Park,

Danjiangkou City, Hubei Province, China

Sell Phone:+86-15221502418

WhatsApp:+86-18930347731 Teams: xiong.bear2

Web: http://www.shanjmc.com

E-mail: bear02@shanjmc.com

Wechat

Export Business