SJ
Shangjie PM

——从顾客利益出发，提供高性价比的机床装备。

Engineered for You-Superior Quality, Unbeatable Value.

龙门加工中心
Gantry Machining Center

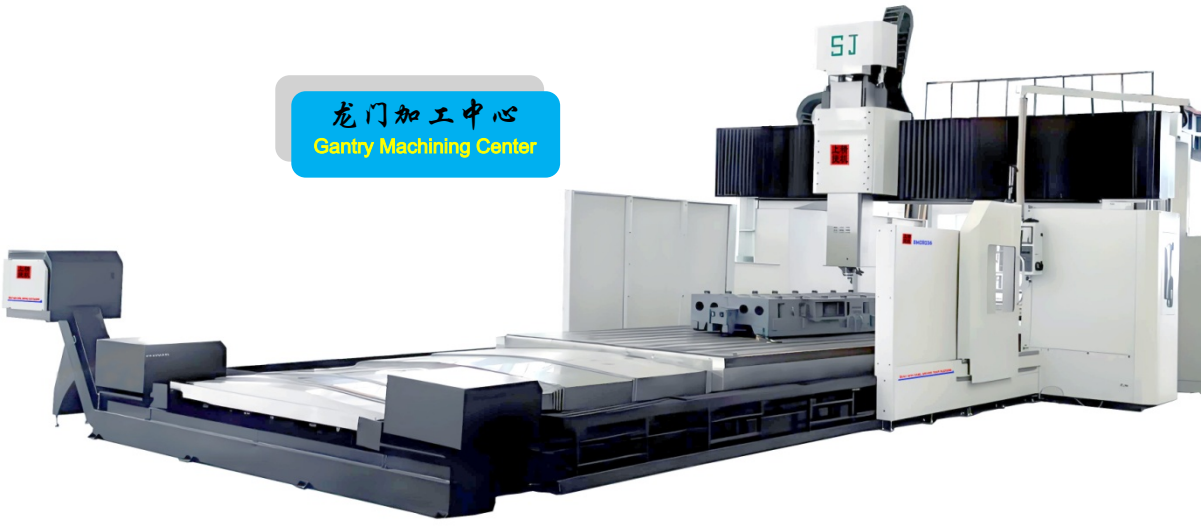

立式加工中心
Vertical Machining Center



卧式加工中心
Horizontal Machining Center

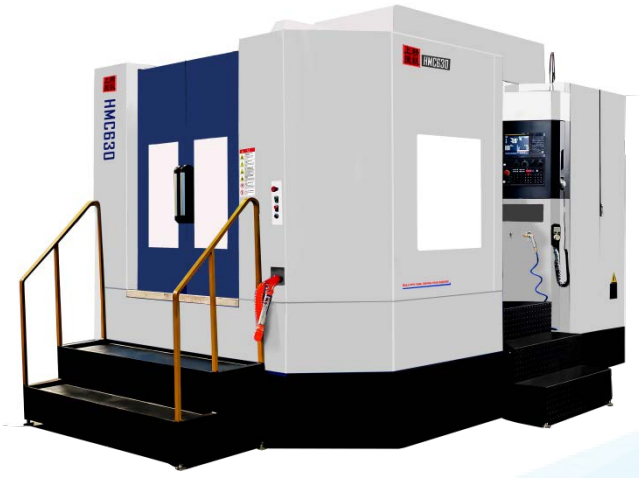

立卧复合加工中心
H&V Machining Center



数控钻铣床
CNC Drilling and Milling Machine



湖北上捷精密机械制造有限公司

上精捷机





湖北上捷精密机械制造有限公司始于 2007 年，目前拥有 2 万平米的高标准厂房。公司产品包括：数控车削中心、立/卧式加工中心、数控龙门加工中心、精密磨床等，我们致力于成为多品种，智能化，精密化，系列化的综合型设备供应商。

公司通过 ISO9001 质量体系认证。我们拥有机床制造的全产业链加工能力，公司设立产品设计部，品控部，铸件加工部，钣金加工部，涂装部，零部件机加部，设备组装、调试部。所有机床从设计到调试出厂全部自主完成，做到产品质量可控。我们拥有多台精密龙门加工中心、立/卧式加工中心、数控车床、激光切割机、数控折弯机等加工设备。

公司拥有激光干涉仪，高精度双轴光电自准直仪，激光角摆仪等众多高精密测量仪器，同时，我们的机床铸件全部选用 HT300 高标号材料。经过回火处理后预留一定时间的自然时效，达到充分释放铸件内应力的目的。再加上严格的品控流程，保证机床品质稳定。

严谨，务实，诚信，担当作为我们恪守的企业发展理念，一定会给你带来满意的设备，达到合作共赢的目的。















立式加工中心
Vertical Machining Center .....4 - 9



龙门式加工中心
Gantry-type Machining Center 10, 11



卧式加工中心
Horizontal Machining Center 12, 13



立卧两用五面体加工中心
Vertical and horizontal dual-purpose
five-sided machining center 14, 15



龙门加工中心
Gantry Machining Center .....16 - 19



数控龙门钻铣床
CNC Gantry Drilling and Milling Machine .....20 - 21



数控钻铣床
CNC Drilling and Milling Machine 22



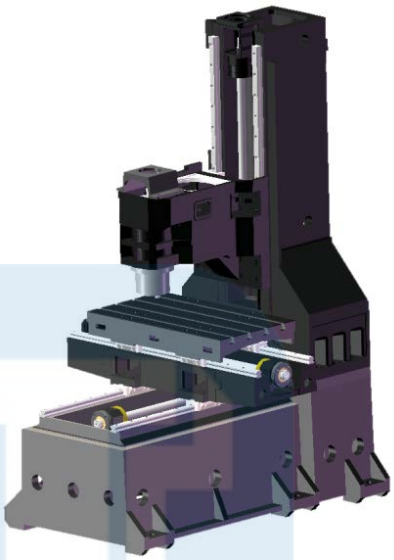

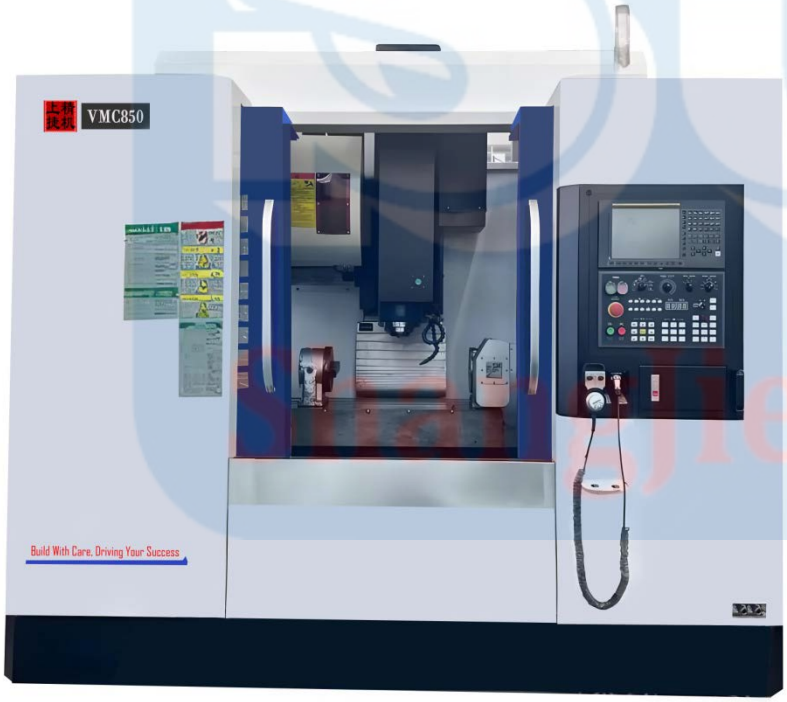

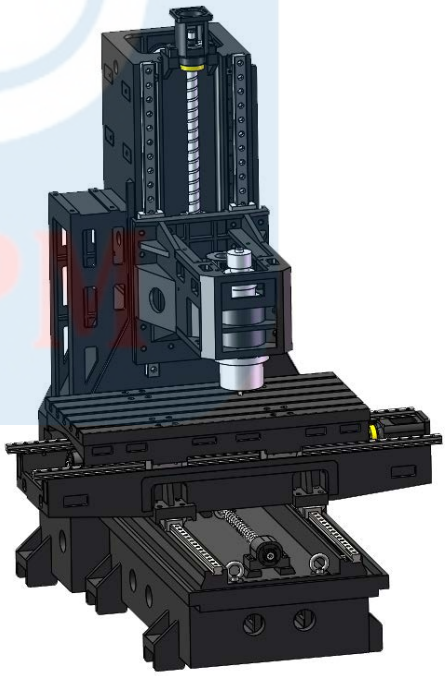

●铸件材质 Casting Material

机床铸件采用 HT300 高标号材料，强度高，抗形变能力强，具有优异吸震能力。经过震动时效和二次回火工艺，消除应力，提供优异的尺寸稳定性和耐久性。保证用户在长时间使用中保持机床精度稳定。

The machine tool castings are made of HT300 high-grade material, which features high strength, strong resistance to deformation and excellent shock absorption capacity. After vibration aging and secondary tempering processes, the stress is eliminated, providing excellent dimensional stability and durability. This ensures that the machine tool maintains stable precision over a long period of use.

●所有安装圆盘式刀库机型，全部采用肩扛式立柱设计。使立柱受力更均匀，提供更好的机床结构稳定性。

All models equipped with disc-type tool magazines adopt a shoulder-carrying column design. thereby ensuring a more uniform force distribution on the column and providing enhanced structural stability for the machine tool.

机床结构 Machine Structure

VMC 系列机床结构采用低重心设计，加大立柱跨距，加宽 Y 轴底座宽度，增加机床稳定性。运用有限元素分析（FEM），优化铸件加强筋形状、位置，使床身强度达到最优。并且在 Y 轴底座和 Z 轴立柱做了特别加强结构。以确保机床在长期运行中具有良好的精度保持性。同时使床身结构更利于重切削，提高工作效率和刀具使用寿命。

VMC series machine tools adopt a low center of gravity design, increase the span of the column, and widen the width of the Y-axis base to enhance the stability of the machine tool. By applying finite element analysis (FEM), the shape and position of the reinforcing ribs of the castings are optimized to achieve the best strength of the bed. Additionally, special reinforcement structures are implemented on the Y-axis base and the Z-axis column to ensure that the machine tool maintains good accuracy during long-term operation. At the same time, the bed structure is more conducive to heavy cutting, improving work efficiency and tool life.

机床配置 Machine Tool Configuration

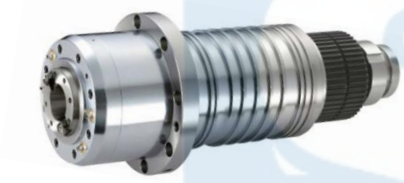

标配台湾品牌高刚性主轴，进口轴承
High-quality spindle, imported bearings

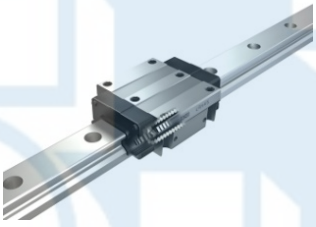

标配 P 级精密滚柱直线导轨
选用 THK, PMI, HIWIN, HTPM 等一线品牌
Precision Grade P roller-type linear guide



标配 C3 级精密研磨滚珠丝杆（预拉伸结构）
C3 grade precision ground ball screw



标配台湾品牌打刀缸
High-quality tool clamping cylinder



标配 P4 级进口角接触配对轴承
选用 NSK, SKF, FAG 等进口品牌
P4 grade imported angular contact paired bearings

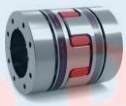

标配精密高刚性联轴器
Precision high-rigidity coupling



标配进口高扭矩同步带
Imported high-torque synchronous belts



根据客户要求配置法那科、三菱、新代、凯恩帝等数控系统
CNC system: FANUC, SYNTEC, KND, Mitsubishi





标配台湾品牌圆盘式或斗笠式刀库
High-quality disc-type / Umbrella-type ATC Tool magazine

技术参数 Specifications

	VMC430	VMC540	VMC740	VMC850	VMC955	VMC1160
工作台尺寸 Workbench size	550x300mm	700x400mm	900x400mm	1050x500mm	1100x550mm	1300x600mm
工作台 T 型槽（数目-尺寸*间距） Workbench T-slot (number - size * pitch)	3-14x90mm	3-14x90mm	4-18x90mm	5-18x90mm	5-18x90mm	5-18x100mm
工作台最大承重 Max. load capacity of the workbench	260KG	350KG	500KG	600KG	700KG	800KG
X 轴行程 X-axis travel distance	410mm	510mm	710mm	810mm	910mm	1110mm
Y 轴行程 Y-axis travel distance	310mm	410mm	410mm	510mm	560mm	610mm
Z 轴行程 Z-axis travel distance	500mm	500mm	500mm	520mm	560mm	600mm
主轴中心至立柱导轨距离 Distance from the center of spindle to the guide rail of the column	380mm	460mm	480mm	565mm	625mm	660mm
主轴端面到工作台面距离 Distance from the spindle face to the worktable surface	100-600mm	100-600mm	110-610mm	120-640mm	120-680mm	120-720mm
导轨形式 Guide rail form	P 级精密滚柱式直线导轨 Precision Grade P roller-type linear guide					
X,Y,Z 快移速度 X,Y,Z fast movement speed	30m/min					
X 轴电机最大转矩 X axis Max. torque of motor	34.5N.m	34.5N.m	45N.m	55.8N.m	55.8N.m	55.8N.m
Y 轴电机最大转矩 Y axis Max. torque of motor	34.5N.m	34.5N.m	45N.m	55.8N.m	55.8N.m	55.8N.m
Z 轴电机最大转矩 Z axis Max. torque of motor	34.5N.m	34.5N.m	55.8N.m	69N.m	69N.m	69N.m
主轴最高转速 Max. spindle speed	8000/12000rpm					
主轴锥孔 Spindle taper hole	BT40		BT40			
主轴电机功率 Spindle motor power	5.5/7.5 KW	7.5/11 KW		11/15 KW		
刀库容量 Tool magazine capacity	斗笠式/12 把 Umbrella-Type 12Tools		圆盘式/20 把 Disc-Type 20Tools	圆盘式/24 把 Disc-Type 24Tools		
刀具最大重量 Max. weight of cutting tools	8 KG					
气源压力 Air source pressure	0.5-0.8 MPa					
机床外型尺寸(长 x 宽 x 高) cm Machine size (L x W x H)	145x148x195	158x158x195	186x160x220	200x190x245	225x205x250	245x218x255
标准机床重量 Standard weight	3.8 T	5.5 T	6.5 T	7.5 T	8 T	8.7T

※1. 参数表里相关尺寸因设计改动，可能与实际不符，以实际为准。

2. 可根据客户需求更改配置或加装主轴中心出水，在线检测，对刀仪等个性配置。

1. The relevant dimensions in the parameter table may not match the actual ones due to design changes. The actual ones shall prevail.

2. Configurations can be modified or customized features such as water outlet at the center of the spindle, online detection, and tool setter can be added according to customer requirements.

Shangjie PM



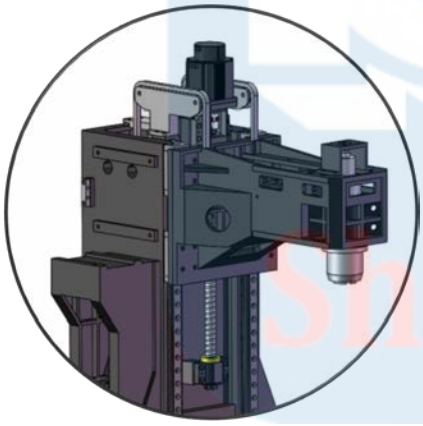

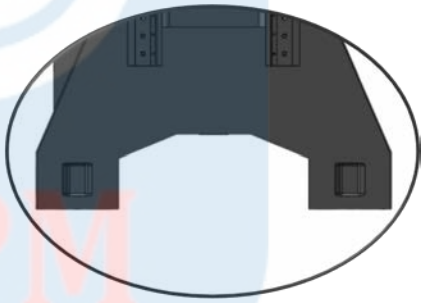

Shanglie PM

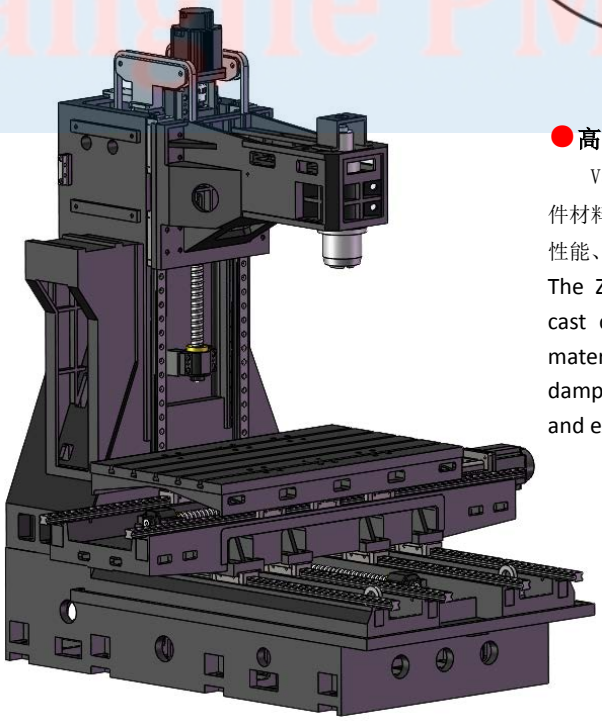

●标配配重系统

VS 系列标配主轴配重系统，能够减轻 Z 轴丝杆负载，减小发热量，降低热延伸现象对机床加工精度的影响。提高机床加工精度和工件表面光洁度。

VS series is equipped with a standard spindle counterweight system, which can reduce the load on the Z-axis lead screw, decrease heat generation, and minimize the impact of thermal elongation on the machining accuracy of the machine tool. This enhances the machining accuracy of the machine tool and the surface finish of the workpiece.

●高刚性设计

VS 系列床身立柱大跨距，所有部件铸件材料采用 HT300 材料，达到优越的减震性能、支撑刚性和优异的稳定性。

The Z-axis column is a large span. All cast components are made of HT300 material, achieving superior vibration damping performance, support rigidity and excellent stability.

●机床结构 Machine Structure

VS 系列为重型立式加工中心，均采用 X 轴 6 滑块，Y 轴四条滚柱线轨 8 滑块，Z 轴立柱增加安装脚跨距以便使底座更宽大，为机床的加工性能提供坚实的基础。整个机床设计以低重心，防扭曲，抗儒变，重切削，高材料去除效率为主旨专业设计制造。

运用有限元素分析（FEM），优化铸件加强筋形状、位置，使床身强度达到最优。并且在 Y 轴底座和 Z 轴立柱做了特别加强结构，以便让床身结构更利于重切削，提高刀具使用寿命。

VS series is a heavy-duty vertical machining center. All models adopt 6 sliders on the X-axis, 4 roller linear guides with 8 sliders on the Y-axis, and the Z-axis column is equipped with an increased installation foot span to make the base wider and provide a solid foundation for the machine tool's processing performance. The entire machine tool is professionally designed and manufactured with the main principles of low center of gravity, anti-distortion, anti-creep, heavy cutting, and high material removal rate.

Finite element analysis (FEM) is used to optimize the shape and position of the reinforcing ribs of the castings, making the bed strength optimal. Additionally, special reinforcement structures are applied to the Y-axis base and Z-axis column to make the bed structure more suitable for heavy cutting and increase the tool life.

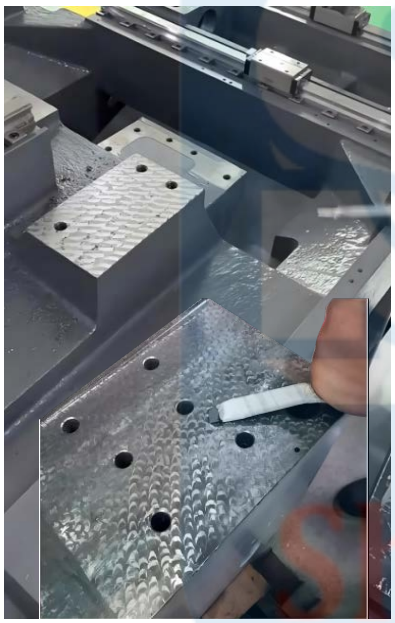

●所有安装面进行人工铲刮

安装面铲刮能确保每个部件全贴合装配，使机床长久保持初始精度。并提高机床刚性，增强加工时的抗震性能和稳定性。

The installation surface adopts manual scraping process, which enables the machine tool to maintain its initial accuracy for a long time. It also enhances the rigidity of the machine tool, as well as its anti-vibration performance and stability during processing.



■ 机床配置 Machine Tool Configuration

●标配台湾品牌高刚性主轴，进口轴承，前 3 后 2 结构

High-quality spindle, imported bearings

●标配 C3 级 Ø50 大规格精密研磨滚珠丝杆（预拉伸结构）

选用 THK, PMI, HIWIN 等一线品牌

C3 grade Ø50 precision ground ball screw



●标配 P 级 45、55 大规格精密滚柱直线导轨

选用 THK, PMI, HIWIN, HTPM 等一线品牌

45、55 Precision Grade P roller-type linear guide





●标配链式排屑机，带小型铁屑车

Standard equipped with chain-type chip conveyor and small iron chip cart.

技术参数 Specifications

	VS120	VS130	VS140	VS150
工作台尺寸 Workbench size	1300x600mm	1300x700mm	1400x800mm	1700x800mm
工作台 T 型槽（数目-尺寸*间距） Workbench T-slot (number - size x pitch)	5-18x100mm	5-18x130mm	5-18x135mm	5-18x150mm
工作台最大承重 Max. load capacity of the workbench	1000KG	1200KG	1400KG	1600KG
X 轴行程 X-axis travel distance	1210mm	1310mm	1410mm	1510mm
Y 轴行程 Y-axis travel distance	610mm	710mm	810mm	810mm
Z 轴行程 Z-axis travel distance	630mm	630mm	710mm	710mm
主轴中心至立柱导轨距离 Distance from the center of spindle to the guide rail of the column	675mm	770mm	850mm	850mm
主轴端面到工作台面距离 Distance from the spindle face to the worktable surface	130-760mm	130-760mm	130-840mm	130-840mm
导轨形式 Guide rail form	P 级精密滚柱式直线导轨 Precision Grade P roller-type linear guide			
X,Y,Z 快移速度 X,Y,Z fast movement speed	30m/min			
X 轴电机最大转矩 X axis Max. torque of motor	55.8N.m	69N.m	69N.m	69N.m
Y 轴电机最大转矩 Y axis Max. torque of motor	55.8N.m	69N.m	69N.m	85.2N.m
Z 轴电机最大转矩 Z axis Max. torque of motor	69N.m	69N.m	85.2N.m	85.2N.m
主轴最高转速 Max. spindle speed	8000/12000rpm			
主轴锥孔 Spindle taper hole	BT40 (BT50)			
主轴电机功率 Spindle motor power	11/15 KW (※15/18 KW)		15/18 KW	
刀库容量 Tool magazine capacity	圆盘式/24 把 Disc-Type 24Tools			
刀具最大重量 Max. weight of cutting tools	8KG(BT40) / 15KG(BT50)			
气源压力 Air source pressure	0.5-0.8 MPa			
机床外型尺寸(长 x 宽 x 高) cm Machine size (L x W x H)	252x215x262	260x215x265	272x258x280	320x265x280
标准机床重量 Standard weight	10.5 T	11.5 T	13.5 T	15 T

※1. 参数表里相关尺寸因设计改动，可能与实际不符，以实际为准。

2. 可根据客户需求更改配置或加装主轴中心出水，在线检测，对刀仪等个性配置。

1. The relevant dimensions in the parameter table may not match the actual ones due to design changes. The actual ones shall prevail.

2. Configurations can be modified or customized features such as water outlet at the center of the spindle, online detection, and tool setter can be added according to customer requirements.

ShangJie PM



●Z 轴四线轨设计

Z 轴滑枕四线轨设计，即提供了足够的刚性，又克服了传统硬轨低速爬行现象和时间长精度丢失缺陷。

The four-track design of the Z-axis ram not only provides sufficient rigidity but also overcomes the low-speed crawling phenomenon and the defect of precision loss over time of the traditional hard rail.

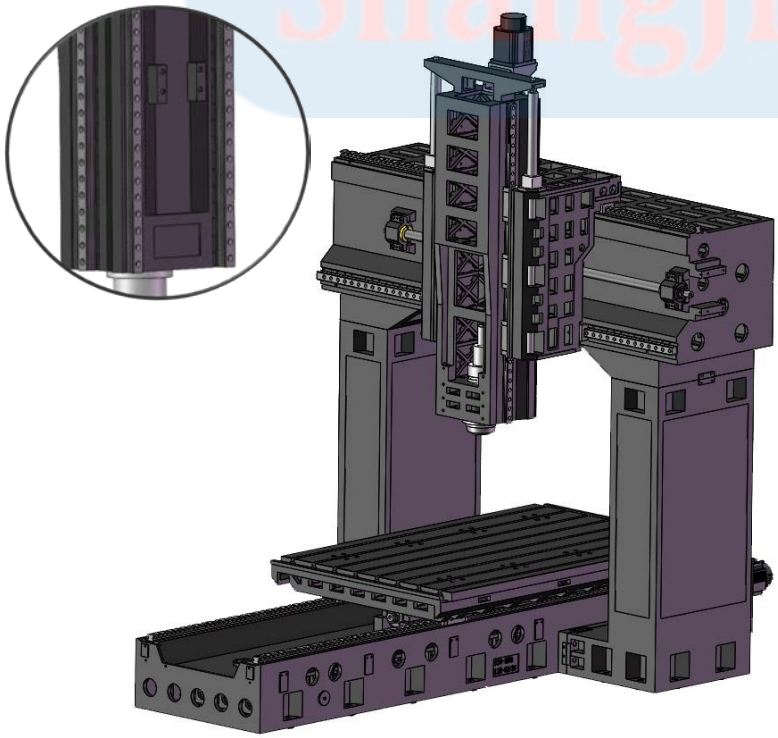

●机床结构 Machine Structure

GS 系列龙门式加工中心，采用龙门结构，秉承传统龙门机床刚性强、结构对称、稳定性高的特点，又兼顾了立式加工中心快速移动的能力， 使客户大型工件的加工效率大副提升。

运用有限元素分析（ FEM ），优化铸件加强筋形状、位置，使床身强度达到最优。并且对 X 轴底座和 Y 轴横梁做了特别加强结构，以便让床身更加稳固，不会出现变形。

GS series gantry machining centers adopt a gantry structure, inheriting the strong rigidity, symmetrical structure and high stability of traditional gantry machines, while also taking into account the rapid movement capability of vertical machining centers, significantly enhancing the processing efficiency of large workpieces for customers.

By applying the finite element analysis (FEM), the shape and position of the casting reinforcing ribs were optimized to achieve the optimal strength of the bed. Additionally, special reinforcing structures were designed for the X-axis base and Y-axis crossbeam to ensure the bed's stability and prevent deformation.

技术参数 Specifications

	GS1610	GS2010	GS1812	GS2012	GS2312	GS2015	GS2315
工作台尺寸 Workbench size	1600x800mm	2000x800mm	1800x1000mm	2000x1000mm	2300x1000mm	2000x1300mm	2300x1300mm
工作台 T 型槽（数目-尺寸*间距） Workbench T-slot	5-22x160mm	5-22x160mm	6-22x160mm	6-22x160mm	6-22x160mm	8-22x160mm	8-22x160mm
工作台最大承重 Max. load capacity of the workbench	2500KG	3500KG	3000KG	4000KG	4500KG	5000KG	5500KG
X 轴行程 X-axis travel distance	1650mm	2100mm	1850mm	2100mm	2400mm	2100mm	2400mm
Y 轴行程 Y-axis travel distance	1000mm	1000mm	1200mm	1200mm	1200mm	1500mm	1500mm
Z 轴行程 Z-axis travel distance	800mm	800mm	800mm	800mm	800mm	800mm	800mm
龙门有效宽度 Gantry Effective Width	1080mm	1080mm	1280mm	1280mm	1280mm	1580mm	1580mm
主轴端面到工作台面距离 Distance from the spindle face to the worktable surface	130-930mm	130-930mm	150-950mm	150-950mm	150-950mm	150-950mm	150-950mm
导轨形式 Guide rail form	P 级精密滚柱式直线导轨 Precision Grade P roller-type linear guide						
X,Y,Z 快移速度 X,Y,Z fast movement speed	20/20/15 m/min						
X 轴电机最大转矩 X axis Max. torque of motor	69N.m	85.2N.m	69N.m	85.2N.m	85.2N.m	85.2N.m	85.2N.m
Y 轴电机最大转矩 Y axis Max. torque of motor	69N.m	69N.m	69N.m	69N.m	69N.m	69N.m	69N.m
Z 轴电机最大转矩 Z axis Max. torque of motor	85.2N.m	85.2N.m	85.2N.m	85.2N.m	85.2N.m	85.2N.m	85.2N.m
主轴最高转速 Max. spindle speed	6000/12000rpm						
主轴锥孔 Spindle taper hole	BT50 (※BT40)						
主轴电机功率 Spindle motor power	15/18 KW (※18.5/22 KW)						
刀库容量 Tool magazine capacity	圆盘式/24 把 Disc-Type 24Tools						
刀具最大重量 Max. weight of cutting tools	15KG(BT50) / 8KG(BT40)						
气源压力 Air source pressure	0.5-0.8 MPa						
机床外型尺寸(长 x 宽 x 高) cm Machine size (L x W x H)	480x270x340	530x270x340	520x300x340	530x300x340	590x300x340	520x350x340	590x3500x340
标准机床重量 Standard weight	18T	23T	25T	24T	25T	26T	28T

● **根据客户要求配置法那科、三菱、新代、凯恩帝等数控系统**

CNC system: FANUC, SYNTEC, KND, Mitsubishi



● **标配链式排屑机带小型铁屑车**

Standard equipped with chain-type chip conveyor and small iron chip cart.



● **台湾品牌 24 把圆盘式刀库**

High-quality disc-type ATC 24Tools



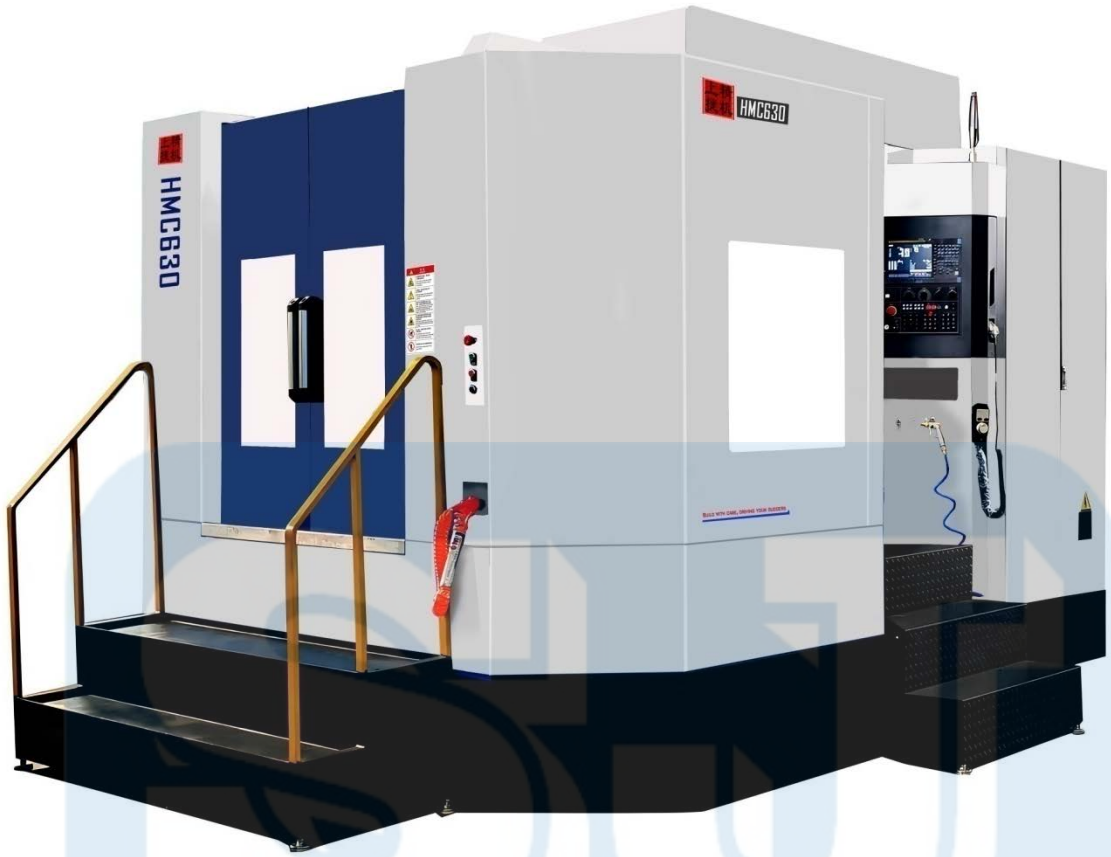

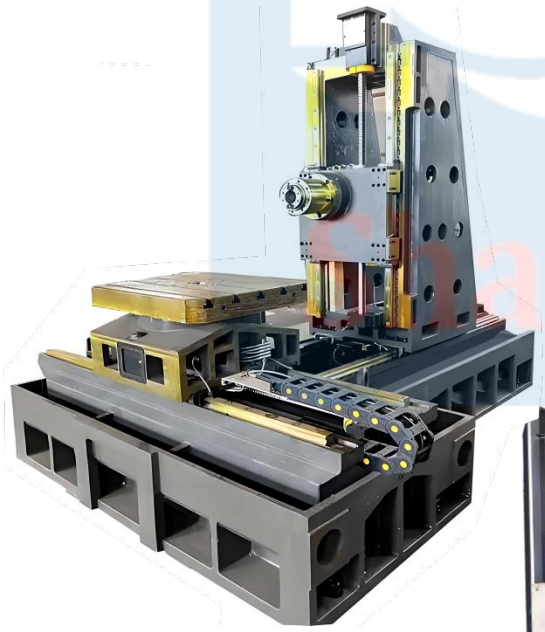

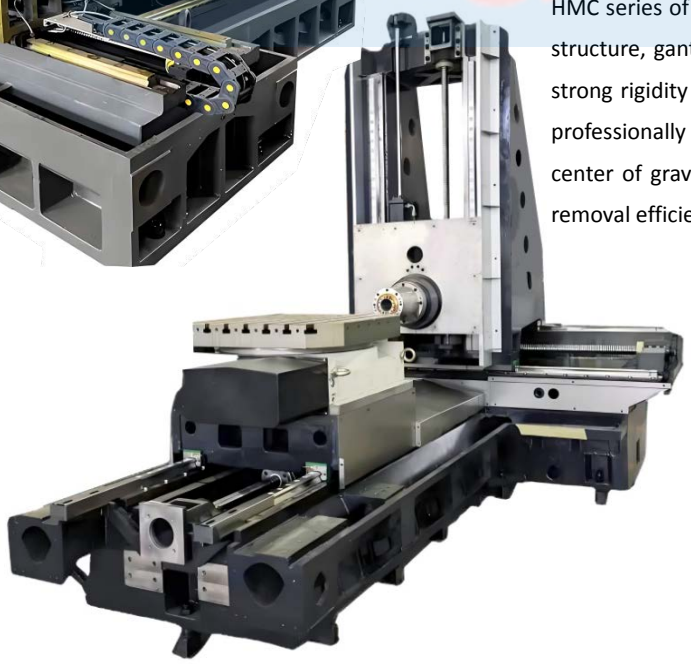

机床结构 Machine Structure

HMC 系列机床采用先进的 T 型整体床身结构，龙门式立柱，正挂箱布局，刚性强，精度保持性好，整套机床设计以低重心，防扭曲，抗儒变，重切削，高材料去除效率为主旨专业设计制造。运用有限元素分析（ FEM ），优化铸件加强筋形状、位置，使床身强度达到最优。并且底座和 Y 轴立柱做了特别加强结构，以便让床身结构更利于重切削，提高刀具使用寿命。

HMC series of machine tools adopts an advanced T-shaped integral bed structure, gantry-type column, and a front-hung box layout. It features strong rigidity and good precision retention. The entire machine tool is professionally designed and manufactured with the main focus on low center of gravity, anti-twist, anti-rust, heavy cutting, and high material removal efficiency.

By applying finite element analysis (FEM), the shape and position of the reinforcing ribs of the castings are optimized to achieve the best bed strength. Additionally, the base and Z-axis column have been specially reinforced to make the bed structure more suitable for heavy cutting and increase the tool life.of the castings, making the bed strength optimal. Additionally, special reinforcement structures are applied to the Y-axis base and Y-axis column to make the bed structure more suitable for heavy cutting and increase the tool life.

技术参数 Specifications

	HMC500	HMC630	HMC800	HMC1000
工作台尺寸 Workbench size	500x500mm	630x630mm	800x800mm	1000x1000mm
工作台 T 型槽（数目-尺寸*间距） Workbench T-slot (number - size x pitch)	5-18x100mm	5-18x100mm	7-18x100mm	7-22x130mm
工作台最大承重 Max. load capacity of the workbench	800KG	1200KG	2000KG	2100KG
X 轴行程 X-axis travel distance	1100mm	1260mm	1300mm	1300mm
Y 轴行程 Y-axis travel distance	600mm	870mm	1000mm	1000mm
Z 轴行程 Z-axis travel distance	650mm	910mm	1100mm	1100mm
主轴中心线至工作台面距离 Distance from the centerline of the main shaft to the worktable surface	-20-570mm	40-920mm	20-1020mm	20-1020mm
主轴端面到工作台中心距离 Distance from the spindle face to the center of the worktable	180-800mm	180-1070mm	180-1280mm	250-1350mm
导轨形式 Guide rail form	P 级精密滚柱式直线导轨 Precision Grade P roller-type linear guide			
X,Y,Z 快移速度 X,Y,Z fast movement speed	30m/min	24m/min		
X 轴电机最大转矩 X axis Max. torque of motor	55.8N.m	69N.m	69N.m	69N.m
Y 轴电机最大转矩 Y axis Max. torque of motor	55.8N.m	69N.m	69N.m	85.2N.m
Z 轴电机最大转矩 Z axis Max. torque of motor	69N.m	69N.m	85.2N.m	85.2N.m
主轴最高转速 Max. spindle speed	8000/12000rpm	6000rpm		
主轴锥孔 Spindle taper hole	BT40	BT50		
主轴电机功率 Spindle motor power	11/15 KW	15/18 KW		
刀库容量 Tool magazine capacity	圆盘式/24 把 Disc-Type 24Tools		圆盘式/30 把 Disc-Type 30Tools	
刀具最大重量 Max. weight of cutting tools	8KG(BT40) / 15KG(BT50)			
定位精度 Positioning accuracy	0.01mm	0.01mm	0.012mm	0.012mm
重复定位精度 Repeatability positioning accuracy	0.006mm	0.006mm	0.008mm	0.008mm
B 轴定位精度 Positioning accuracy of B-axis	10”	10”	10”	10”
B 轴重复定位精度 Repeatability positioning accuracy of B-axis	6”	6”	6”	6”
机床外型尺寸(长 x 宽 x 高) cm Machine size (L x W x H)	270×300×280	480×400×280	530×410×310	560×430×310
标准机床重量 Standard weight	9.5 T	11 T	19 T	21 T

●台湾品牌高刚性主轴，进口轴承，前 3 后 2 结构

High-quality spindle, imported bearings



●选用进口双导程精密蜗轮蜗杆

双导程精密蜗轮蜗杆实现零间隙传动与 20000 小时免维护寿命。同时具有传动比大，传动平稳和自锁特性等优势，特别适合铣削加工。

The double lead precision worm gear and worm achieve zero clearance transmission and a maintenance-free lifespan of 20,000 hours. It also features a large transmission ratio, smooth transmission, and self-locking properties, making it particularly suitable for milling operations.



●360°滑块直联免抬起转台

标配专利技术的 360°免抬起转台，连续定位分度可达 0.001°，全系采用滑块直联结构，液压锁紧，具有高刚性，高精度的特点。

Standard equipped with a lift-free turntable, continuous positioning and indexing can reach 0.001°. The entire series adopts a slider direct connection structure, featuring high rigidity and high precision.





●选用进口 P4 级精密转台轴承

选用进口 P4 级精密转台轴承，超规格配置，具有三列滚子，分别提供轴向和径向支撑。使得工作台面夹紧力矩大，抗颠覆力矩能力强。

Imported P4 grade precision turntable bearings are selected, featuring three rows of rollers that respectively provide axial and radial support. This results in a large clamping torque on the worktable surface and a strong anti-overturning torque.

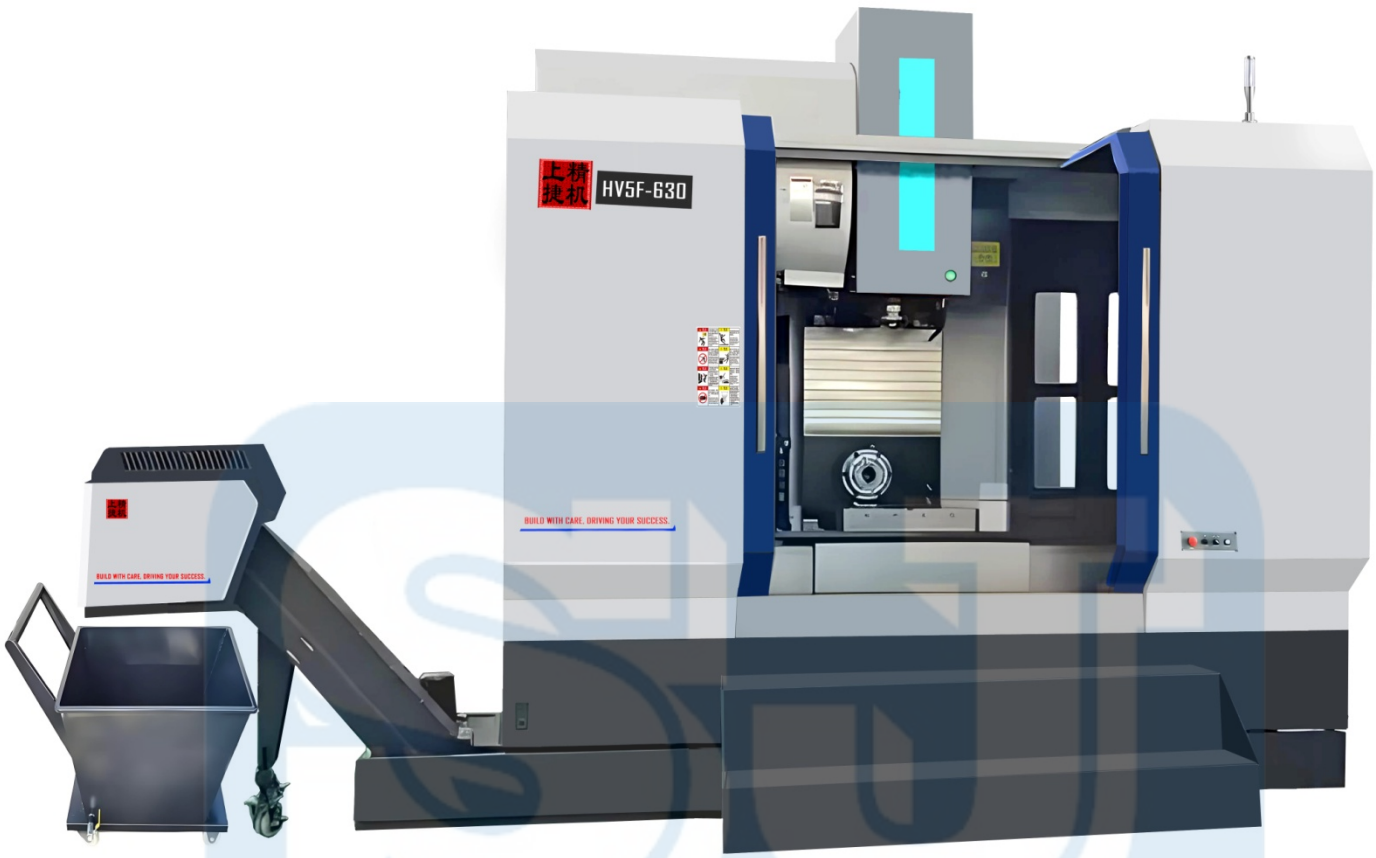

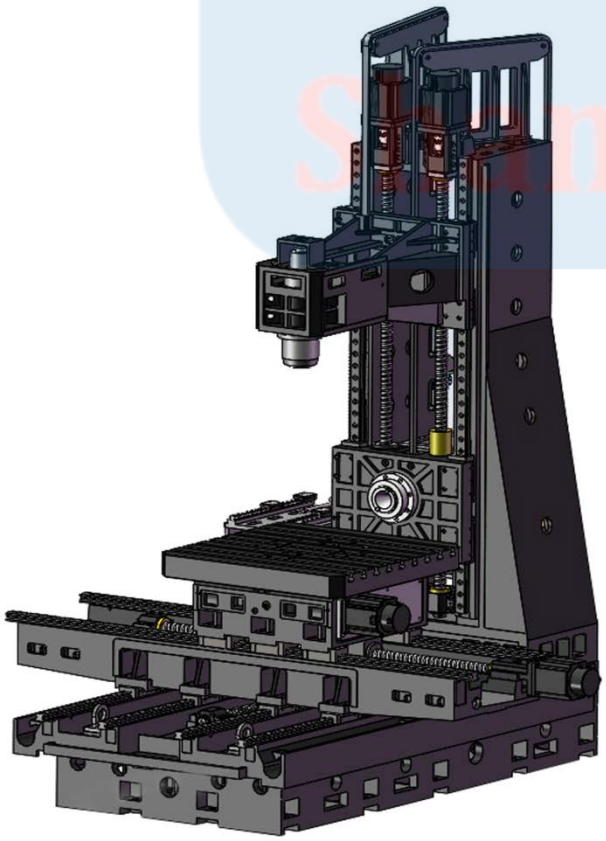

机床结构 Machine Structure

HV5F 系列机床采用龙门立柱固定式整体床身结构，大跨距人字形龙门立柱，正挂箱布局，配合宽大、厚重的四条滚柱线轨布局底座，使得机床刚性强，精度保持性好，整套机床设计以低重心，防扭曲，适合重切削为主旨专业设计制造。

运用有限元分析（ FEM ），优化铸件加强筋形状、位置，使床身强度达到最优。并且底座和 Y 轴立柱做了特别加强结构，以便让床身结构更利于重切削，提高刀具使用寿命。

HV5F series machine tools adopt a fixed gantry column integral bed structure, featuring a large-span H-shaped gantry column and a front-hung box layout. Coupled with a wide and heavy four-roller linear guide layout base, the machine tools have strong rigidity and good precision retention. The entire machine tool is professionally designed and manufactured with a focus on low center of gravity, anti-twist, and suitability for heavy cutting.

Finite element analysis (FEM) is applied to optimize the shape and position of the reinforcing ribs of the castings, achieving the optimal strength of the bed. Additionally, the base and Y-axis column have been specially reinforced to make the bed structure more suitable for heavy cutting and increase the tool life.

技术参数 Specifications

		HV5F-500	HV5F-630	HV5F-800	HV5F-1000
工作台尺寸 Workbench size		500x500mm	630x630mm	800x800mm	1000x1000mm
工作台 T 型槽 (数目-尺寸*间距) Workbench T-slot (number - size x pitch)		5-18x100mm	5-18x100mm	7-18x100mm	7-22x130mm
工作台最大承重 Max. load capacity of the workbench		800KG	1200KG	2000KG	2100KG
卧加单元 Horizontal Machining section	X 轴行程 X-axis travel distance	1100mm	1200mm	1300mm	1300mm
	Y 轴行程 Y-axis travel distance	530mm	630mm	800mm	1000mm
	Z 轴行程 Z-axis travel distance	580mm	580mm	1000mm	1000mm
	主轴中心线至工作台面距离 Distance from the centerline of the main shaft to the worktable surface	0-580mm	0-580mm	-50-750mm	-50-950mm
	主轴端面到工作台距离 Distance from the spindle face to the worktable surface	0-530mm	0-630mm	-60-940mm	-60-940mm
立加单元 Vertical machining section	Z 轴行程 Z-axis travel distance	580mm	580mm	800mm	1000mm
	主轴端面到工作台面距离 Distance from the spindle face to the worktable surface	120-700mm	120-700mm	150-950mm	150-1150mm
	主轴中心线至工作台中心距离 Distance from the centerline of the Spindle to the center of worktable	-210-290mm	-220-380mm	-230-570mm	-230-770mm
导轨形式 Guide rail form		P 级精密滚柱式直线导轨 Precision Grade P roller-type linear guide			
X,Y,Z 快移速度 X,Y,Z fast movement speed		30m/min	24m/min		
X 轴电机最大转矩 X axis Max. torque of motor		55.8N.m	69N.m	69N.m	69N.m
Y 轴电机最大转矩 Y axis Max. torque of motor		69N.m	69N.m	85.2N.m	85.2N.m
Z 轴电机最大转矩 Z axis Max. torque of motor		55.8N.m	69N.m	85.2N.m	85.2N.m
主轴最高转速 Max. spindle speed		8000/12000rpm	6000-8000rpm	6000rpm	
主轴锥孔 Spindle taper hole		BT40	BT50		
主轴电机功率 Spindle motor power		11/15 KW	15/18 KW		
刀库容量 Tool magazine capacity		圆盘式/24 把 Disc-Type 24Tools			
刀具最大重量 Max. weight of cutting tools		8KG(BT40) / 15KG(BT50)			
定位精度 Positioning accuracy		0.01mm	0.01mm	0.012mm	0.012mm
重复定位精度 Repeatability positioning accuracy		0.006mm	0.006mm	0.008mm	0.008mm
B 轴定位精度 Positioning accuracy of B-axis		10”	10”	10”	10”
B 轴重复定位精度 Repeatability positioning accuracy of B-axis		6”	6”	6”	6”
机床外型尺寸(长 x 宽 x 高) cm Machine size (L x W x H)		270×300×280	480×400×280	530×410×310	560×430×310
标准机床重量 Standard weight		12 T	15 T	19 T	21 T



●选用进口双导程精密蜗轮蜗杆，实现零间隙传动与 20000 小时免维护寿命。360° 免抬起转台，滑块直联结构，加工刚性强，精度稳定。连续定位分度可达 0.001°。

Double lead precision worm gear and worm, achieving zero clearance transmission. 360° non-lifting turntable, direct connection structure of slider, strong processing rigidity, stable precision. Continuous positioning indexing can reach 0.001°.





●选用进口 P4 级精密转台轴承，超规格配置，具有三列滚子，分别提供轴向和径向支撑。使得工作台面夹紧力矩大，抗颠覆力矩能力强。

INA P4 precision turntable bearings have strong anti-overturning moment capacity.

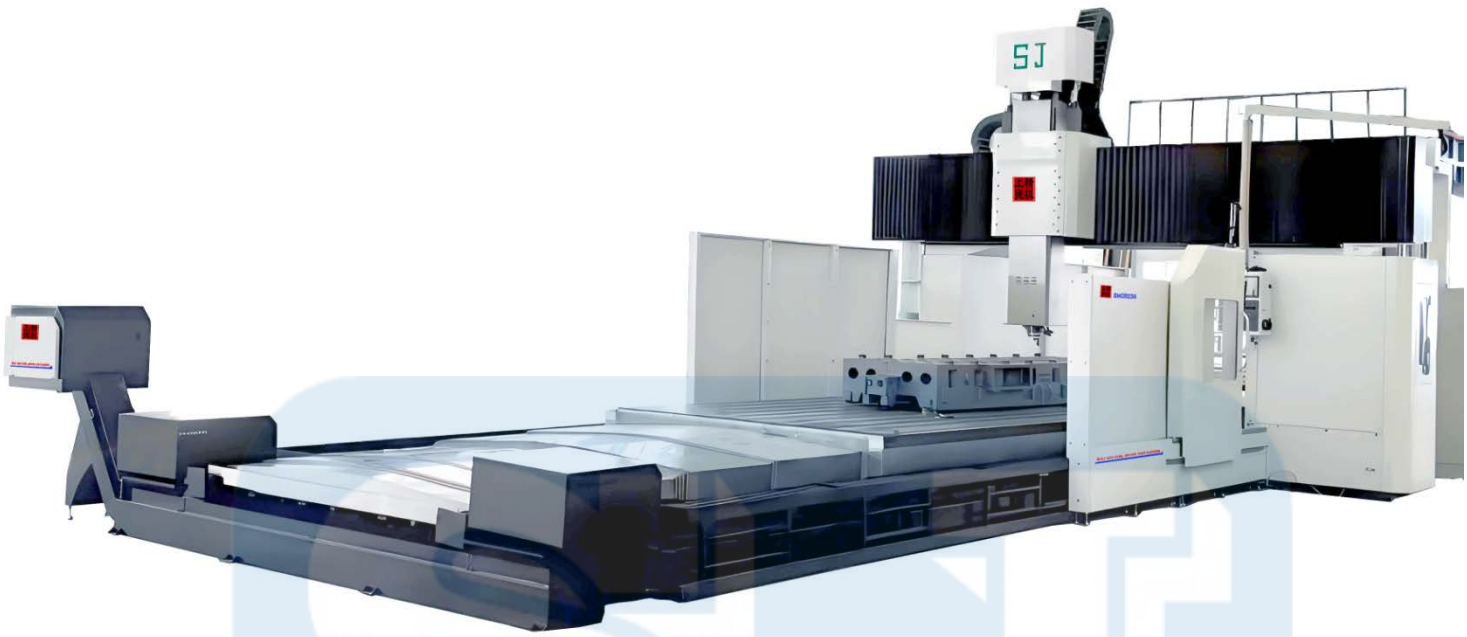



●机型优势 Machine Advantages

GMC 系列龙门机床，秉承龙门机床刚性强、结构对称、稳定性高的特点，配套超规格精密滚珠丝杆、滚柱线轨、高刚性主轴、先进的数控系统等零部件，可实现大型工件，模具的重切削和精密加工要求。

GMC series gantry machine tools, inheriting the characteristics of gantry machine tools such as strong rigidity, symmetrical structure and high stability, are equipped with oversized ball screws, roller linear guides, high-rigidity spindles, advanced numerical control systems and other components, which can meet the requirements of heavy cutting and precision processing of large workpieces and molds.

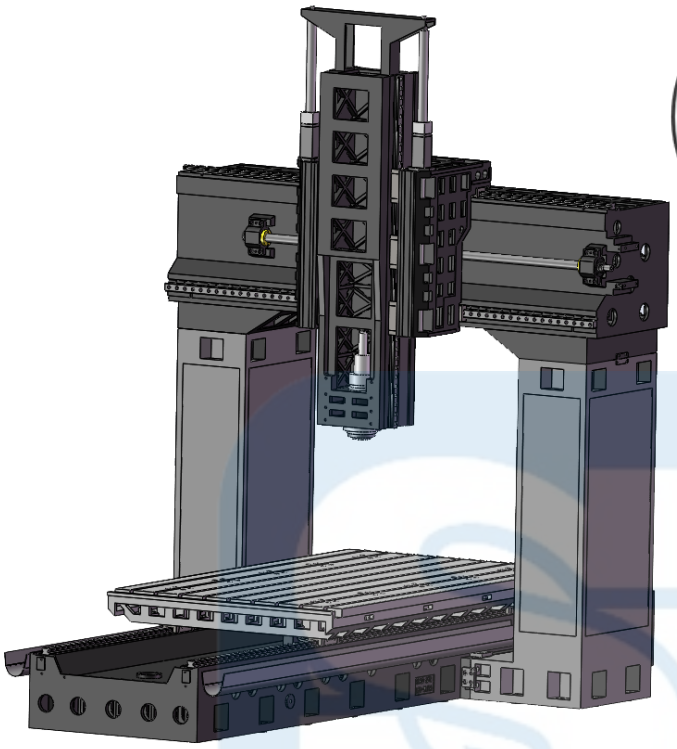

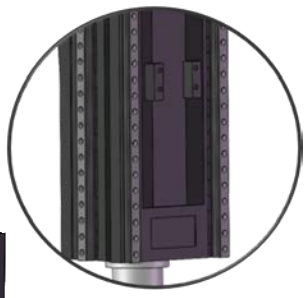

●Z 轴四线轨设计

Z轴滑枕四线轨设计，即提供了足够的刚性，又克服了传统硬轨低速爬行现象和时间长精度丢失缺陷。

The four-track design of the Z-axis ram not only provides sufficient rigidity but also overcomes the low-speed crawling phenomenon and the defect of precision loss over time of the traditional hard rail.

●X 轴行程 6 米以上机型标配专利技术的旋转螺母装置，此装置能够大副提高机床的行运精度，克服因为长丝杆扭曲造成的 X 轴丝杆运行精度不稳定现象，并且因为丝杆不动，从而能大副提高其使用寿命。

Machines with an X-axis travel of over 6 meters are standardly equipped with a patented rotating nut device. This device can significantly enhance the machine tool's running accuracy, overcome the unstable running accuracy of the X-axis lead screw caused by the twisting of the long lead screw, and because the lead screw does not move, it can greatly increase its service life.



●机床结构 Machine Structure

GMC 系列机床采用龙门结构，加大立柱和横梁箱体结构支撑，整机刚性好。机床铸件采用 HT300 高标号材料，强度高，抗形变能力强，具有优异吸震能力。

运用有限元素分析（ FEM ），优化铸件加强筋形状、位置，使床身强度达到最优。并且对 X 轴底座和 Y 轴横梁做了特别加强结构，以便让床身更加稳固，不会出现变形。

GMC series of machine tools adopts a gantry structure, with enlarged column and crossbeam box structures for support, ensuring excellent rigidity of the entire machine. The castings of the machine tools are made of HT300 high-grade material, which is of high strength, strong resistance to deformation, and has excellent shock absorption capacity.

Finite Element Analysis (FEM) is employed to optimize the shape and position of the reinforcing ribs of the castings, achieving the optimal strength of the machine bed. Additionally, special reinforcement structures are applied to the X-axis base and Y-axis crossbeam to make the machine bed more stable and prevent deformation.

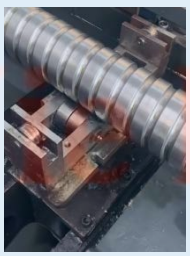



●X 轴行程 4 米以上标配丝杆托起装置，有效防止丝杆上沉，提高丝杆寿命，维持 X 轴运行精度。

For X-axis travel over 4 meters, a standard lead screw support device is provided, effectively preventing the lead screw from sinking, enhancing its lifespan and maintaining the X-axis running accuracy.



●标配台湾品牌皮带或者直联高刚性主轴，SKF，NSK，FAG 轴承，前 3 后 2 结构，提供超强的切削能力。

The belt or direct drive high rigidity spindle, imported bearings, provides super strong cutting capacity.

技术参数 Specifications

	GMC2018	GMC2518	GMC3018	GMC3023	GMC4023	GMC3028	GMC4028
X 轴行程 X-axis travel distance	2000mm	2500mm	3000mm	3000mm	4000mm	3000mm	4000mm
Y 轴行程 Y-axis travel distance	1800mm	1800mm	1800mm	2300mm	2300mm	2800mm	2800mm
Z 轴行程 Z-axis travel distance	800mm	800mm	1000mm	1000mm	1000mm	1000mm	1000mm
龙门有效宽度 Gantry Effective Width	1800mm	1800mm	1800mm	2300mm	2300mm	2800mm	2800mm
主轴端面到工作台面距离 Distance from the spindle face to the worktable surface	250-1050mm	250-1050mm	250-1250mm	250-1250mm	250-1250m	250-1250m	250-1250mm
工作台尺寸 Workbench size	1500x2000mm	1500x2500mm	1500x3000mm	2000x3000mm	2000x4000mm	2000x3000mm	2000x4000mm
工作台 T 型槽(数目-尺寸*间距) Workbench T-slot (number - size x pitch)	9-22x160mm	9-22x160mm	9-22x160mm	9-22x200mm	9-22x200mm	9-22x200mm	9-22x200mm
工作台最大承重 Max. load capacity of the workbench	6T	8T	10T	15T	18T	15T	18T
导轨形式 Guide rail form	P 级精密滚柱式直线导轨 Precision Grade P roller-type linear guide						
X,Y,Z 快移速度 X,Y,Z fast movement speed	15/20/15 m/min			12/20/15 m/min			
X 轴电机最大转矩 X axis Max. torque of motor	85.2N.m	85.2N.m	85.2N.m	85.2N.m	105N.m	85.2N.m	105N.m
Y 轴电机最大转矩 Y axis Max. torque of motor	85.2N.m	85.2N.m	85.2N.m	85.2N.m	85.2N.m	85.2N.m	85.2N.m
Z 轴电机最大转矩 Z axis Max. torque of motor	85.2N.m	85.2N.m	85.2N.m	85.2N.m	105N.m	85.2N.m	105N.m
主轴最高转速 Max. spindle speed	6000rpm						
主轴锥孔 Spindle taper hole	BT50						
主轴电机功率 Spindle motor power	15/18 KW		18.5/22 KW	22/26 KW			
刀库容量 Tool magazine capacity	（选配 Optional configuration）圆盘式/24 把 Disc-Type 24Tools						
刀具最大重量 Max. weight of cutting tools	20 KG						
电源总容量 KVA Total power capacity	35	35	35	50	50	50	50
机床外型尺寸(长 x 宽 x 高) cm Machine size (L x W x H)	740x400x430	770x400x430	940x400x500	1000x470x500	1250x470x500	1000x530x500	1250x530x500
标准机床重量 Standard weight	28 T	32 T	35 T	38 T	45 T	40 T	47 T

※1. 参数表里相关尺寸因设计改动，可能与实际不符，以实际为准。

2. 可根据客户需求更改配置或加装主轴中心出水，在线检测，对刀仪等个性配置。

1. The relevant dimensions in the parameter table may not match the actual ones due to design changes. The actual ones shall prevail.

2. Configurations can be modified or customized features such as water outlet at the center of the spindle, online detection, and tool setter can be added according to customer requirements.

Shangjie PM

技术参数 Specifications

	GMC5028	GMC6028	GMC5032	GMC6032	GMC8032	GMC5038	GMC6038	GMC8038
X 轴行程	5000mm	6000mm	5000mm	6000mm	8000mm	5000mm	6000mm	8000mm
Y 轴行程	2800mm	2800mm	3200mm	3200mm	3200mm	3800mm	3800mm	3800mm
Z 轴行程	1000mm	1000mm	1000mm	1000mm	1000mm	1250mm	1250mm	1250mm
龙门有效宽度	2800mm	2800mm	3200mm	3200mm	3200mm	3800mm	3800mm	3800mm
主轴端面到工作台面距离	250-1050mm	250-1050mm	250-1250mm	250-1250mm	250-1250m	250-1500m	250-1500mm	250-1500mm
工作台尺寸	2000x5000mm	2000x6000mm	2500x5000mm	2500x6000mm	2500x8000mm	3000x5000mm	3000x6000mm	3000x8000mm
工作台 T 型槽 (数目-尺寸*间距)	9-22x200mm	9-22x200mm	12-28x200mm	12-28x200mm	12-28x200mm	14-36x200mm	14-36x200mm	14-36x200mm
工作台最大承重	22T	25T	25T	28T	35T	28T	35T	40T
导轨形式	P 级精密滚柱式直线导轨 Precision Grade P roller-type linear guide							
X,Y,Z 快移速度	10/20/15 m/min		10/15/10 m/min					
X 轴电机最大转矩	105N.m	105N.m	105N.m	144N.m	144N.m	105N.m	144N.m	144N.m
Y 轴电机最大转矩	85.2N.m	85.2N.m	85.2N.m	85.2N.m	85.2N.m	85.2N.m	85.2N.m	85.2N.m
Z 轴电机最大转矩	105N.m	105N.m	105N.m	105N.m	105N.m	105N.m	105N.m	105N.m
主轴最高转速	6000rpm							
主轴锥孔	BT50							
主轴电机功率	22/26 KW							
刀库容量	（选配 Optional configuration）圆盘式/24 把 Disc-Type 24Tools							
刀具最大重量	20 KG							
电源总容量 KVA	50	50	50	50	50	65	65	65
机床外型尺寸 cm	1500x530x500	1700x530x500	1500x580x560	1700x580x560	2300x580x560	1500x620x680	1700x620x680	2300x620x680
标准机床重量	52 T	60 T	65 T	75 T	85 T	78 T	85 T	105 T

Shangjie PM

数控龙门钻铣床 CNC Gantry Drilling and Milling Machine

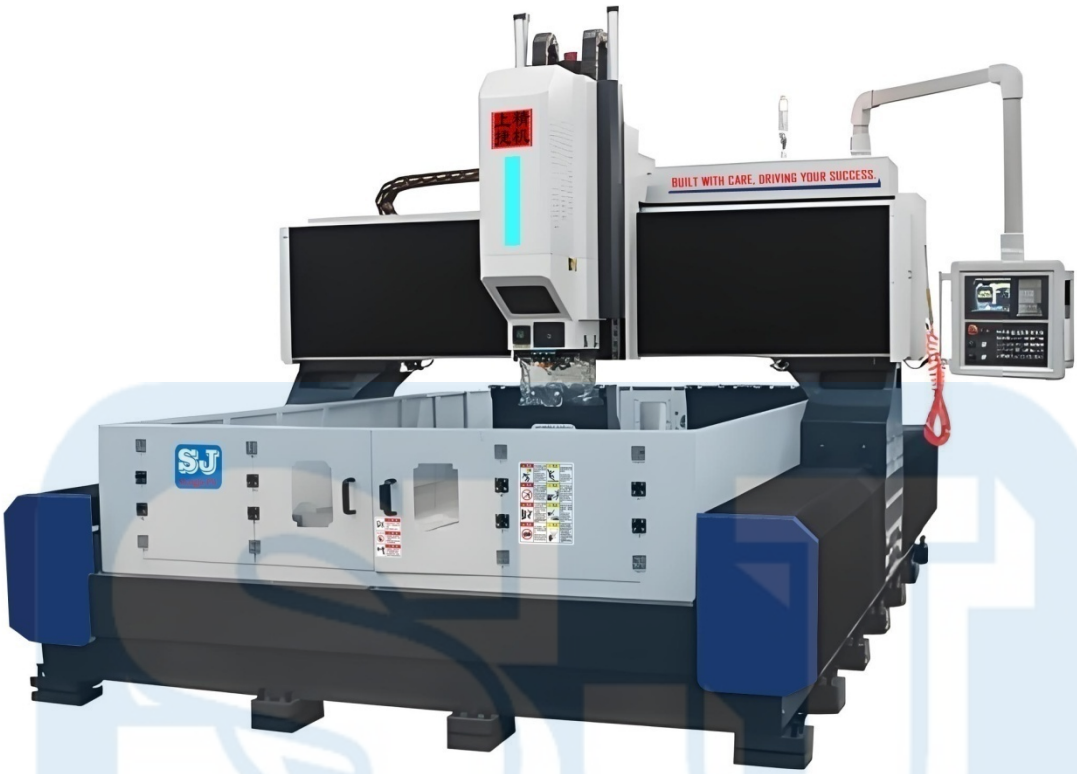



●机型优势 Machine Advantages

GNC 系列数控龙门钻铣床，秉承龙门机床刚性强、稳定性高的特点，配套高刚性主轴、先进的数控系统等零部件，可实现大型工件，大型平板、风电法兰、盘类、环件等工件的高效钻孔、攻丝、铣面加工。

The GNC series CNC gantry boring and milling machine, inheriting the strong rigidity and high stability of gantry machines, is equipped with high-rigidity spindles, advanced CNC systems and other components. It can efficiently perform drilling, tapping and milling surface processing on large workpieces, large plates, wind turbine flanges, discs, rings and other workpieces.

数控龙门钻铣床 CNC Gantry Drilling and Milling Machine

客户可通过相对较低的设备成本投入实现对大型工件的高效钻孔，攻丝，铣面加工，全数控免编程操作，提高加工质量和效率，降低人工使用成本。

Customers can achieve efficient drilling, tapping and milling of large workpieces with relatively low equipment cost investment. The fully CNC operation without programming improves processing quality and efficiency, and reduces labor costs.

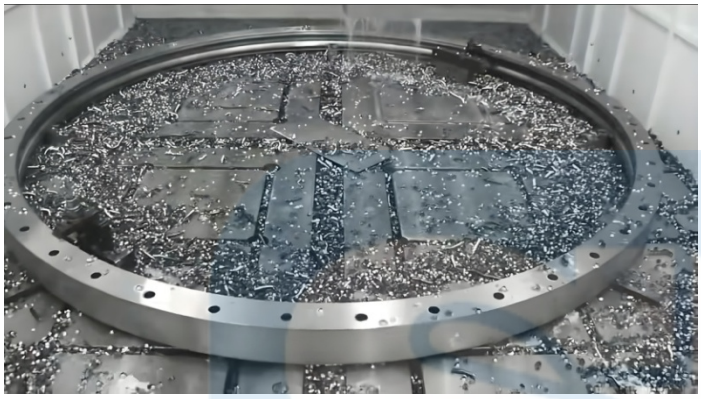





选用知名品牌配件，配合铲刮工艺高标准装配，使设备达到高精度、高刚性、高动态响应的使用要求。

The equipment is assembled with high standards by using high-end brand components and the scraping process, which enables it to meet the requirements of high precision, high rigidity and high dynamic response.





技术参数 Specifications

	GNC1020	GNC1616	GNC2016	GNC2020	GNC2525	GNC3020	GNC4025
工作台尺寸 mm Workbench size	1000x2000	1600x1600	2000x1600	2000x2000	2500x2500	3000x2000	4000x2500
最大钻孔直径 Max. drilling diameter	Φ50	Φ75	Φ75	Φ90	Φ90	Φ90	Φ90
最大攻丝直径 Max. tapping diameter	M24	M32	M32	M36	M36	M36	M36
主轴端面到工作台面距离 Distance from the spindle face to the worktable surface	160-760mm		200-800mm				
主轴锥孔 Spindle taper hole	BT40	BT50 (with a center water outlet function)					
主轴电机功率 Spindle motor power	7.5/11 KW		11/15 KW		15/22 KW		
主轴最高转速 Max. spindle speed	3000rpm						
X 轴行程 X-axis travel distance	2000mm	1600mm	2000mm	2000mm	2500mm	3000mm	4000mm
Y 轴行程 Y-axis travel distance	1000mm	1600mm	1600mm	2000mm	2500mm	2000mm	2500mm
Z 轴行程 Z-axis travel distance	600mm	600mm	600mm	600mm	600mm	600mm	600mm
X,Y,Z 快移速度 X,Y,Z fast movement speed	10/15/15 m/min				10/12/12 m/min		
XYZ 轴重复定位精度 Spindle taper hole	0.015/2000mm				0.02/2000mm		
刀库容量 Tool magazine capacity	直排式刀库 Straight-line tool magazine （选配 Optional configuration）圆盘式/24 把 Disc-Type 24Tools						
刀具最大重量 Max. weight of cutting tools	8KG(BT40) / 15KG(BT50)						
机床外型尺寸(长 x 宽 x 高) cm Machine size (L x W x H)	350x180x220	300x380x220	350x380x220	350x420x220	400x460x220	4500x420x220	550x460x220
标准机床重量 Standard weight	9 T	13 T	16 T	25 T	28 T	28 T	35 T

Shangjie PM

数控钻铣床 CNC Drilling and Milling Machine



机型优势 Machine Advantages

CNC系列数控钻铣床，采用HT300材料整体床身结构，刚性强、稳定性高，配置35mm P级精密线轨，Ø40C级研磨滚珠丝杆，X轴6滑块，结合CNC数控系统，可实现三轴联动，完成复杂零件的钻铣加工。

CNC series of numerically controlled drilling and milling machines adopt an integral bed structure made of HT300 material, which features strong rigidity and high stability. They are equipped with 35mm P-level precision linear guides and Ø40 C-level ground ball screws, with 6 slides on the X-axis. Combined with the CNC numerical control system, they can achieve three-axis linkage and complete the drilling and milling processing of complex parts.

技术参数 Specifications

	CNC530	CNC740	CNC950	CNC1250
工作台尺寸 Workbench size	900x280mm	1300x350mm	1500x420mm	1800x420mm
工作台T型槽（数目-尺寸*间距） Workbench T-slot (number - size * pitch)	3-14x80mm	3-18x90mm	3-18x90mm	3-18x90mm
工作台最大承重 Max. load capacity of the workbench	150KG	250KG	350KG	350KG
X轴行程 X-axis travel distance	500mm	700mm	900mm	1200mm
Y轴行程 Y-axis travel distance	300mm	400mm	500mm	500mm
Z轴行程 Z-axis travel distance	500mm	500mm	500mm	500mm
主轴端面到工作台面距离 Distance from the spindle face to the worktable surface	100-600mm	100-600mm	120-620mm	120-620mm
X,Y,Z快移速度 X,Y,Z fast movement speed	25m/min			
X轴电机最大转矩 X axis Max. torque of motor	25.2N.m	25.2N.m	25.2N.m	25.2N.m
Y轴电机最大转矩 Y axis Max. torque of motor	25.2N.m	25.2N.m	25.2N.m	25.2N.m
Z轴电机最大转矩 Z axis Max. torque of motor	34.5N.m	34.5N.m	34.5N.m	34.5N.m
主轴最高转速 Max. spindle speed	8000 rpm			
主轴锥孔 Spindle taper hole	BT30 / BT40	BT40		
主轴电机功率 Spindle motor power	3.7/5.5 KW	5.5/7.5 KW	7.5/11 KW	
刀库容量 Tool magazine capacity	（选配 Optional configuration）斗笠式/12 把 Umbrella-Type 12Tools			
刀具最大重量 Max. weight of cutting tools	8 KG			
气源压力 Air source pressure	0.5-0.8 MPa			
机床外型尺寸(长 x 宽 x 高) cm Machine size (L x W x H)	155x155x210	175x160x220	195x170x220	225x170x220
标准机床重量 Standard weight	1.8 T	2.0 T	2.3 T	2.7 T

Shanghe PM

在线检测仪器 Online detection instruments

●雷尼绍 TS27R 对刀仪
Renishaw tool presetter



●雷尼绍机床测头 OMP40， OMP60
Renishaw machine toolmeasuring head



●雷尼绍 NC4 激光对刀仪
可以对机床刀具非接触在线检测，适应严苛的加工环境
Renishaw NC4 Laser Tool Setter



●全闭环光栅尺
实现对机床运动轴全闭环控制，使机床真正达到μ级精密加工
Renishaw fully closed-loop grating scale

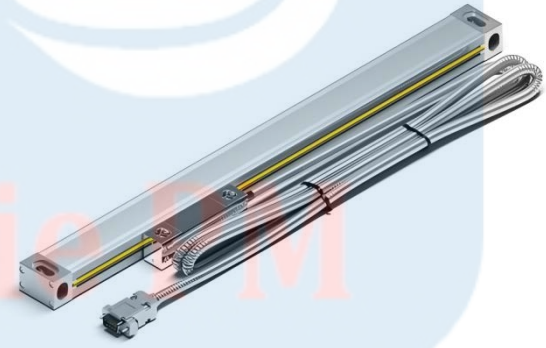

●全闭环圆光栅
机床旋转轴，转台配置增量或绝对值全闭环圆光栅，能够对旋转角度实现精密控制，在精密加工时对机床各轴进行精确联动控制。
Renishaw fully enclosed circular grating



●全闭环时栅尺
全闭环时栅尺能够实现光栅的所有性能外对加工环境适应性更宽泛，无俱严苛使用条件。保证机床稳定运行。
Fully closed-loop time-grating ruler



功能扩展组件 Function expansion component

● 第四轴转台
Fourth-axis turntable

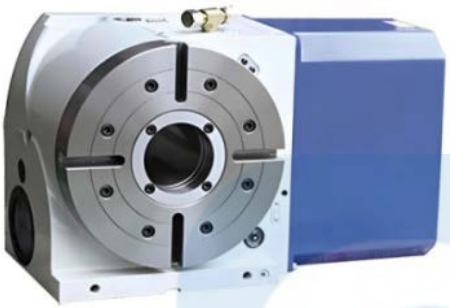

● 转台尾座
Turntable tailstock



● 第四轴转台加装桥板
Bridge plate added to the fourth-axis turntable

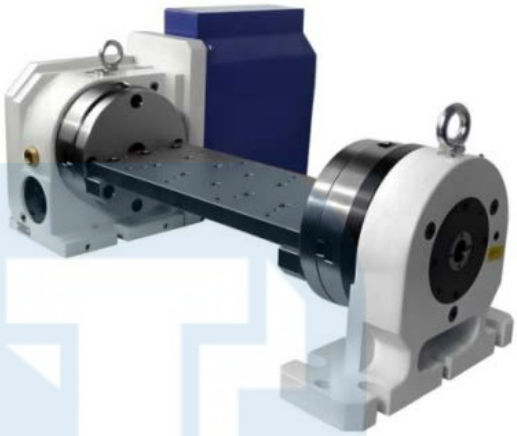

● 五轴摇篮转台
Five-axis cradle turntable

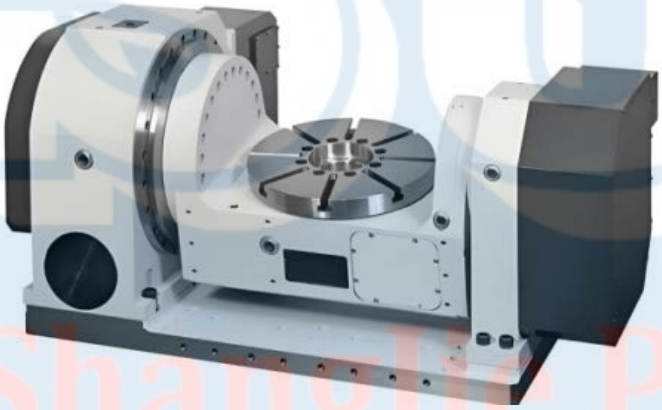

● 单摇臂转台
Single-arm swing turntable

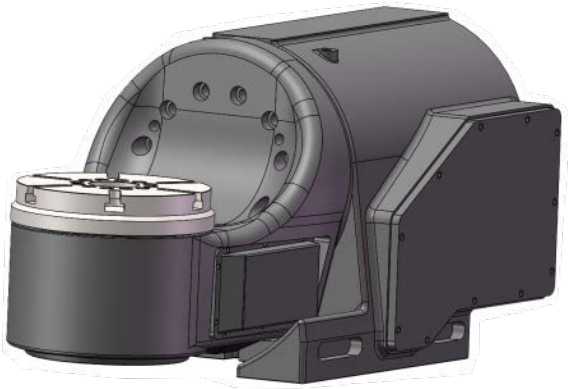

● 卧式转台
Horizontal



ShangJie PM

机床角度头系列 Machine tool angle head

BT40、BT50 微型角度头 BT40/50 Miniature Angle Head



BT50 手动角度头 BT50 Manual Angle Head



ShangJie PM

BT50 液压打刀角度头
BT50 Hydraulic Angle Head for Tool Changing





BT50 自动装卸，液压打刀角度头
BT50 Automatic loading and unloading, Hydraulic Angle Head for Tool Changing









ShangJie PM

机床加工能力增配系列 Machine tool processing capacity enhancement series

●主轴中心高压出水过滤系统
High-pressure coolant filtration system



●主轴高压中心出水旋转接头
High-pressure through-spindle coolant rotary union



●主轴油（水）冷机
Spindle oil (water) cooler machine



●可根据客户要求配置各型数控系统，如：法那科，西门子，新代，凯恩帝等品牌。
CNC control systems can be configured according to customer requirements.
Like: FANUC, SIEMENS, SYNTEC, KND and so on.









特别提醒

1. 本目录中的内容，可能有因改良而无法预见告知的变更情况，我公司保留变更权，恕不另行通知，请谅解。
2. 由于印刷关系，实体产品的颜色与所于的图片有部分差异。本画册产品图片，版权所有，不得转载，违者必究。
3. The contents in this catalogue may be subject to changes due to improvements that cannot be foreseen and notified. Our company reserves the right to make changes without further notice. We apologize for any inconvenience this may cause.



湖北上捷精密机械制造有限公司

湖北省丹江口市六里坪工业园双龙路 B 区 5 号

国内销售电话：15907285811

售后服务电话：13669092850

0719-5715855

网址：http://www.shanjmc.com

E-mail: aimmy@shanjmc.com

国内业务

Hubei Shangjie Precision Machinery Manufacturing Co., Ltd.

No. 5, B Zone, Shuanglong Road, Liuliping Industrial Park,

Danjiangkou City, Hubei Province, China

Sell Phone:+86-15221502418

WhatsApp:+86-18930347731 Teams: xiong.bear2

Web: http://www.shanjmc.com

E-mail: bear02@shanjmc.com

Wechat

Export Business